Personal Property of Lieut Russell B. Witte Jr.

AIR CORPS TECHNICAL SCHOOLS

AIR CORPS MAINTENANCE SYSTEM

M-28-3

DEPARTMENT OF MECHANICS

ORIGINAL EDITION JANUARY 24. 1941

LATEST REVISION JANUARY 24 1941

RESTRICTED

2/1/41 - 15000

R E S T R I C T E D

NOTICE:-

THIS DOCUMENT CONTAINS INFORMATION AFFECTING THE NATIONAL DEFENSE OF THE UNITED STATES WITHIN THE MEANING OF THE ESPIONAGE ACT (U.S.C. 50;31,32). THE TRANSMISSION OF THIS DOCUMENT OR THE REVELATION OF ITS CONTENTS IN ANY MANNER TO ANY UNAUTHORIZED PERSON IS PROHIBITED.

THE INFORMATION CONTAINED IN DOCUMENTS MARKED RESTRICTED WILL NOT BE COMMUNICATED TO THE PUBLIC OR TO THE PRESS, BUT IT MAY BE COMMUNICATED TO ANY PERSON KNOWN TO BE IN THE SERVICE OF THE UNITED STATES, AND TO PERSONS OF UNDOUBTED LOYALTY AND DISCRETION WHO ARE COOPERATING IN GOVERNMENTAL WORK. (AR 330-5).

AIR CORPS MAINTENANCE SYSTEM

M-28-3

ORIGINAL EDITION.....January 24, 1941

Air Corps Technical School,
Department of Mechanics.

January 15, 1941.

Air Corps Maintenance System

			Paragraphs
Section	I	Functions of Air Corps Activities	1-6
"	II	Publications	7-17
"	III	Records and Reports	18-42
"	IV	General Maintenance Policies	43-49

Section I

Functions of Air Corps Activities

	Paragraphs
The Office Chief of Air Corps	1
The Materiel Division	2
The Air Depot	3
The Air Base	4
The Squadron	5
The Special Service School	6

1. The Office Chief of Air Corps--a . The Air Corps, under the direction of the Secretary of War, is charged with the following functions:

(1) Research, specification, development, inspection and supervision of tests of aeronautical materials used by the Army.

(2) Production, procurement, storage, issue and maintenance of aeronautical equipment and supplies used by the Air Corps.

(3) Determination of Air Corps requirements of equipment and supplies supplied by other arms and services for installation in aircraft.

(4) Establish, maintain and operate such repair depots and laboratories as are necessary for the repair and manufacture of Air Corps materiel and equipment.

(5) Collect and maintain data relative to raw material, etc., essential to aircraft production in time of war.

(6) Train personnel in the duties involved in the supply and maintenance of aeronautical material and equipment.

(7) Operate military aircraft and such equipment used in conjunction therewith.

(8) Collect, compile and disseminate statistical and technical data required by the Air Corps.

b. In order to carry out the various functions of the Air Corps the following activities have been established:

(1) The Materiel Division.

(2) The Air Depot

(3) The Air Base

(4) The Squadron

(5) The Special Service School.

2. The Materiel Division--a. The principal functions of the Materiel Division are:

(1) Perform the necessary research and experimentation in connection with materials and equipment used by the Air Corps.

(2) Perform the necessary work in connection with the procurement of Air Corps supplies and equipment. This involves the preparation of specifications and engineering data, the procurement and production of drawings, and the handling of bids, proposals, contracts, orders and legal and finance matters.

(3) Perform the necessary inspections in connection with the procurement of Air Corps supplies and equipment at contractor's plants.

(4) Perform the following in connection with the maintenance and service of equipment and supplies in the field:

(a) Maintain records of all supplies on hand in the Air Corps.

(b) Compile basic tables of equipment and supply allowances.

(c) Allocate and distribute aircraft and controlled stocks of supplies to the service.

(d) Outline and supervise methods of maintenance of Air Corps equipment in use in the service.

(e) Supervise the operation of Air Depots.

(f) Operate a central cost accounting office and supervise all cost accounting activities of the Air Corps.

(g) Classify Air Corps equipment and supplies and compile, publish and distribute catalogs.

(h) Allocate funds for the normal operation of Air Corps activities.

(i) Provide shipping arrangements for the distribution of Air Corps equipment and supplies.

(j) Provide for the disposal of surplus Air Corps property.

(k) Compile statistics, charts, tables, etc., showing the status of Air Corps equipment.

3. The Air Depot--a. The depot performs the following functions in connection with the operation of air bases, schools and squadrons within a designated control area.

(1) Storage, replenishment and distribution of Air Corps equipment and supplies.

(2) Third echelon maintenance for all aircraft and equipment in use or in storage at the depot, or which may be received from air bases, schools and squadrons which cannot efficiently handle this work.

(3) Manufacture such equipment, parts, tools, etc., as may be directed by the Chief of the Materiel Division.

4. The Air Base--a. Air bases are charged with second echelon maintenance. They provide housing for the troops, suitable buildings for equipment and supplies, and fields for flying purposes. Air Corps equipment and supplies required for the operation of an air base or Air Corps activity located at a base are obtained from the Air Depot in the control area in which the base is located.

5. The Squadron--a. The squadron is the smallest administrative unit of the Air Corps. It is ordinarily located at an air base but may also serve as a separate unit.

b. The functions of a squadron depend upon its type, assignment and equipment available. The Air Base Squadron is charged with second echelon maintenance. In addition it is charged with the maintenance-repair, in so far as facilities permit, of air base equipment. Operating units assigned to the Air Corps, such as Transport squadrons, Observation squadrons, School squadrons, etc. are charged with first echelon maintenance of equipment in their possession.

6. The Special Service School--a. Air Corps Special Service Schools operate directly under the supervision of the Chief of the Air Corps, except for routine military administration and supply, which functions are under the supervision of Corps Area Commanders. Air Corps equipment and supplies are obtained from the Air Depot in the Control Area in which the Service School is located.

b. The function of the various Special Service Schools follows:

(1) The Primary Flying School. Its function is to train officers, cadets and certain enlisted men in the fundamentals of piloting airplanes and the technical subjects connected therewith, to a degree of proficiency

which will enable them to pursue satisfactorily the course of training prescribed for the Advanced Flying School.

(2) The Advanced Flying School. Its function is to train students as airplane pilots and observers for duty with tactical units.

(3) The Tactical School. Its purpose is to train officers in command and staff duties of air units and conduct refresher courses for general and senior field officers.

(4) The Technical School. Its purpose is to train officers in the subjects of Armament, Communications, Airplane Maintenance-Engineering and Photography, and enlisted men to become specialists in the various subjects applicable to the Air Corps.

(5) The Engineering School. Its purpose is to train officers in aeronautical engineering.

Section II

Publications

	Paragraphs
Circulars	7
Blueprints And Change Notices	8
Specifications	9
Technical Orders, Radiograms And Telgrams	10
Parts Catalogs	11
Airplane Operation Instructions - Data Sheets	12
Stock Lists	13
Distribution of Technical Orders And Stock Lists	14
Status of Equipment Book	15
Air Corps Standards Book	16
Drafting Room Manual	17

7. Circulars--a. General. Air Corps Circulars are published by the Chief of the Air Corps for the purpose of issuing information and instructions of an administrative nature pertaining solely to the Air Corps and which are subject to more or less frequent changes.

b. Titles. The title of each circular consists of two parts, viz.:

(1) The general title or major subject classification, e.g., "BLANK FORMS AND REPORTS."

(2) The subtitle, which indicates the specific subject covered, e.g., "A. C. Form No. 1 - Airplane Flight Report."

c. Numbering. (1) The number of each circular consists of two parts, separated by a dash, viz.:

(a) The first, which is the number of the general title or classification and is known as the base number.

(b) The second, which is the number of the subtitle and is known as the sub-number.

(2) The sub-numbers within each classification will, in general, run consecutively with the exception of Classification 15, "Blank Forms and Reports". This major classification is sub-divided into groups the sub-numbers of which, with a few exceptions, correspond to the numbering of the blank forms which the circulars cover. Thus, Circular 15-1 contains instructions on the use of Form No. 1; Circular 15-83 covers Form No. 83 and Circular 15-241 covers Form No. 241.

d. Changes. (1) When it is found necessary to change or amend the greater portion of a circular, it is revised and a complete new circular is issued. In the heading of the first page of the new circular appears the sentence, "This Circular supersedes Circular_____, dated _____". In such cases the superseded circular is withdrawn from the files and destroyed, and the new one inserted in its proper place.

(2) When a minor change or amendment is desired in a circular and when for the sake of economy it is considered inadvisable to issue a complete new circular, the amendatory instructions are issued in a circular bearing the same title and number as the original, but with the addition of a letter to the sub-number. In the heading of the first page of the amending circular appears the sentence, "Circular ____, dated _____, is amended as follows:". Amendatory circulars are filed immediately following the circulars which they amend and are cross-referenced thereon.

(3) In general, changes contained in amendatory circulars are cumulative; that is, a second amendatory circular bearing the same title includes all changes contained inthe first amendatory circular, and so on. When such is the case, there appears in the heading of the circular the sentence, "This Circular amends Circular_____, dated_____, and supersedes Circular_____, dated _____".

(4) All changes or amendments to A. C. Circulars are issued as amendatory circulars.

e. Rescissions. Circulars which are rescinded or superseded are withdrawn from the files and destroyed.

f. Filing. Circulars are filed in a loose leaf binder. They are arranged in numerical order as determined first, by the base number of classification and second, by the sub-number. Circulars in which a letter is included after the sub-number are filed in alphabetical order immediately following the circular bearing the same base and sub-number.

g. Index of Circulars. (1) The General Index, Circular 0-1, lists the general titles or major subject classifications, together with the corresponding base number applicable to each of the classifications.

(2) A complete index of Air Corps Circulars is published semi-annually as, of January 1st and July 1st under the number 0-2. This index contains a numerical list of all circulars published under each major subject

classification. It also contains a list of all circulars which have been rescinded or replaced during the preceding six months.

(3) Upon receipt of a new index or an amendment thereto activities will check their circular files. Superseded or rescinded circulars are removed and the necessary action taken to secure and insert in their proper places all circulars that are missing.

h. Distribution. (1) Supply and distribution of Air Corps Circulars is made by the Chief of the Air Corps. The requisite number of copies to supply all prescribed files is furnished to station commanders for distribution to organizations and activities under their command.

(2) Air Corps Circulars are furnished for the official files of Air Corps activities and are not diverted to personal files of individuals.

(3) A complete file of all current Air Corps Circulars is maintained in the offices enumerated in Air Corps Circular 5-9.

(4) Limited files of Air Corps Circulars are maintained by officers in charge of sections or offices, covering all subjects pertinent to the performance of their duties. These limited files are supplied from the extra copies furnished to commanding officers of stations, organizations and detachments.

8. Blueprints And Change Notices--a. What constitutes a set of drawings? A set of drawings covering an article of equipment consists of a Parts List (Fig. 1A, B, C, & D) a main assembly drawing (Fig. 2), sub-assembly drawings (Fig. 3A & B), and detail drawings (Fig. 4 & 5) of all the parts that make up the article. Main assembly drawings show the part numbers of sub-assemblies which make up the main assembly. Sub-assembly drawings show the part numbers of parts which make up the sub-assembly. Detail drawings show manufacturing specifications for the part concerned.

b. Numbering of drawings. Each drawing bears a number which is placed in the lower right-hand corner of the drawing. This number is also the part number of the article. On sub-assembly and detail drawings, the part number of the next assembly, or assembly of which the article is a part, is placed just above the part number in the lower R. H. corner of the drawing.

c. Right and left-hand views. Unless it is absolutely necessary to do otherwise, machines and like equipment are always drawn headed toward the left hand. The name on the drawing does not indicate which hand is drawn, but the following notation is placed above the title block:

L. H. shown: 0000.
R. H. opposite: 0000-1.

The plain drawing number always indicates the part shown and the (-1) shows the opposite hand view.

d. Scale of drawings. (1) As a general rule, drawings are made actual size; all actual size drawings are drawn to scale within 1/32 of an inch.

VALVE ASSEMBLY - OIL DILUTION SOLENOID
Numerical Index

Part No.	Alphabetical List Page No.	Part No.	Alphabetical List Page No.
34A3590-8	6		
37A6211	6		
37A6212	6		
37A6213	6		
37A6214	6		
37A6215	6		
37A6216	6		
37A6217	6		
37A6218	6		
37A6219	6		
37A6220	6		
37A6221	6		
37A6222	6		
37A6223	6		
37A6224	6		
37A6225	6		
37A6226	6		
37A6228	6		
37A6229	6		
37A6230	6		
37A6231	6		
37A6232	6		
37A6233	6		
37B6227	6		
37D6210	6		
38A2014	6		

Void

Fig. 1A. Numerical Parts List

Valve Assy - Oil Dilution Solenoid

ALPHABETICAL LIST

Description.	Part No.	Assy. List Page No.	Total Quant.	Class.	Unit Price
Body - Solenoid Valve.	37B6227	1	1	01-I	
Boss - Cover.	37A6225	2	1	01-I	
Clip - Terminal.	37A6215	1	2	01-I	
Coil - Assy.	37A6211	1	1	01-I	
Collar - Ground.	38A2014	1	1	01-I	
Core.	37A6219	1	1	01-I	
Cover.	37A6224	2	1	01-I	
Cover - Assy.	37A6223	2	1	01-I	
Cup - Valve Sealing.	37A6229	1	1	01-I	
End - Fixed.	37A6218	1	1	01-I	
End - Removable.	37A6226	1	1	01-I	
Gasket - Valve (Large).	37A6230	1	1	01-I	
Housing - Solenoid.	37A6217	1	1	01-I	
Housing Assy. - Solenoid.	37A6216	1	1	01-I	
Nut - Self Locking.	365-1032	2	3	04-A	
Pin - Escutcheon.	AN302-18-2	2	1	29	
Pin - Escutcheon.	AN302-18-5	1	1	29	
Plate - Insulating.	32A6232	1	1	01-I	
Plug - Pipe.	895B70	2	2	04-A	
Plug - Solenoid Valve Pipe.	37A6231	1	1	01-I	
Plunger Assembly - Solenoid Valve.	37A6220	1	1	01-I	
Plunger - Valve.	37A6221	1	1	01-I	
Post - Terminal.	37A6214	1	2	01-I	
Ring - Packing.	34A3590-8	1	1	01-B	
Screw - Fillister Hd.	AN501A8-6	2	4	29	
Spool.	37A6212	1	1	01-I	
Spring - Valve.	37A6228	1	1	01-I	
Terminal - Assy.	37A6213	1	2	01-I	
Tube - Insulating.	37A6233	1	1	01-I	
Valve Assy - Oil Dilution Solenoid.	37D6210	1	1	03-D	
Valve - Solenoid.	37A6222	1	1	01-I	
Washer.	AN960B10	2	3	04-A	
Washer - Plain.	AN960-8	2	4	04-A	
Wire (Commercial Prod).	Spec.-57-211	1	.52lb.	68	
Wire - Lock.	995C32-2	2	1	04-A	
Wire - Lock.	995C40-4	2	2	04-A	

Void

Fig. 1B. Alphabetical Parts List

MAJOR ITEM

ASSEMBLY UNIT VALVE ASSEMBLY - OIL DILUTION SOLENOID

PART NUMBER	SIZE	1	2	3	4	5	PART NAME	No. REQ'D.
37D6210	D	Valve Assembly -					Oil Dilution Solenoid	1
37B6227	B		Body - Solenoid Valve					1
37A6231	A		Plug - Solenoid Valve Pipe					1
37A6220	A		Plunger Assembly - Solenoid Valve					1
37A6221	A			Plunger -			Valve	1
37A6222	A			Valve - Solenoid				1
AN302-18-5	A			Pin - Escutcheon				1
37A6228	A		Spring - Valve					1
37A6229	A		Cup - Valve Sealing					1
37A6230	A		Gasket - Valve (large)					1
34A3590-8	A		Ring - Packing					1
37A6211	A		Coil Assembly					1
				Wire (Commercial Product)			.52	Lb.
37A6212	A			Spool				1
37A6213	A				Terminal Assembly			2
37A6214	A					Post - Terminal		2
37A6215	A					Clip - Terminal		2
37A6216	A		Housing Assembly - Solenoid					1
37A6219	A			Core				1
37A6218	A			End - Fixed				1
37A6217	A			Housing - Solenoid				1
37A6226	A		End - Removable					1
37A6233	A		Tube - Insulating					1
37A6232	A		Plate - Insulating					1
38A2014	A		Collar - Ground					1

Void

			1	2	3	4	5	

CHECKER Altick ISSUED ORIGINAL 12-16-37 PART LIST NO. 58021

Mat. Div. A. C. 125-Wright Field-8-29-39-100M.

Fig. 1C. Assembly List (58021)

AIR CORPS, MATERIEL DIVISION—PART LIST E. O. 2 PAGES, PAGE 2

MAJOR ITEM

ASSEMBLY UNIT VALVE ASSEMBLY - OIL DILUTION SOLENOID

	PART NUMBER	SIZE	1	2	3	4	5	PART NAME	No. REQ'D.
	AN960B10	A		Washer - Plain					2
	365-1032	A		Nut - Self Locking					2
	37A6223	A		Cover Assembly					1
	37A6224	A			Cover				1
	37A6225	A			Boss - Cover				1
	AN960B10	A		Washer					1
	365-1032	A		Nut - Self Locking					1
	AN302-18-2	A		Pin - Escutcheon					1
	AN501A8-6	A		Screw - Fill. Head					4
	AN960-8	A		Washer - Plain					4
	995C40-4	A		Wire - Lock					2
	995C32-2	A		Wire - Lock					1
	895B70	A		Plug - Pipe					2

Void

1 2 3 4 5

CHECKER Altick ISSUED ORIGINAL 12-16-37 PART LIST NO. 58022 [redacted]

Mat. Div. A. C. 125-Wright Field-8-29-39-100M.

Fig. 1D. Assembly List (58022)

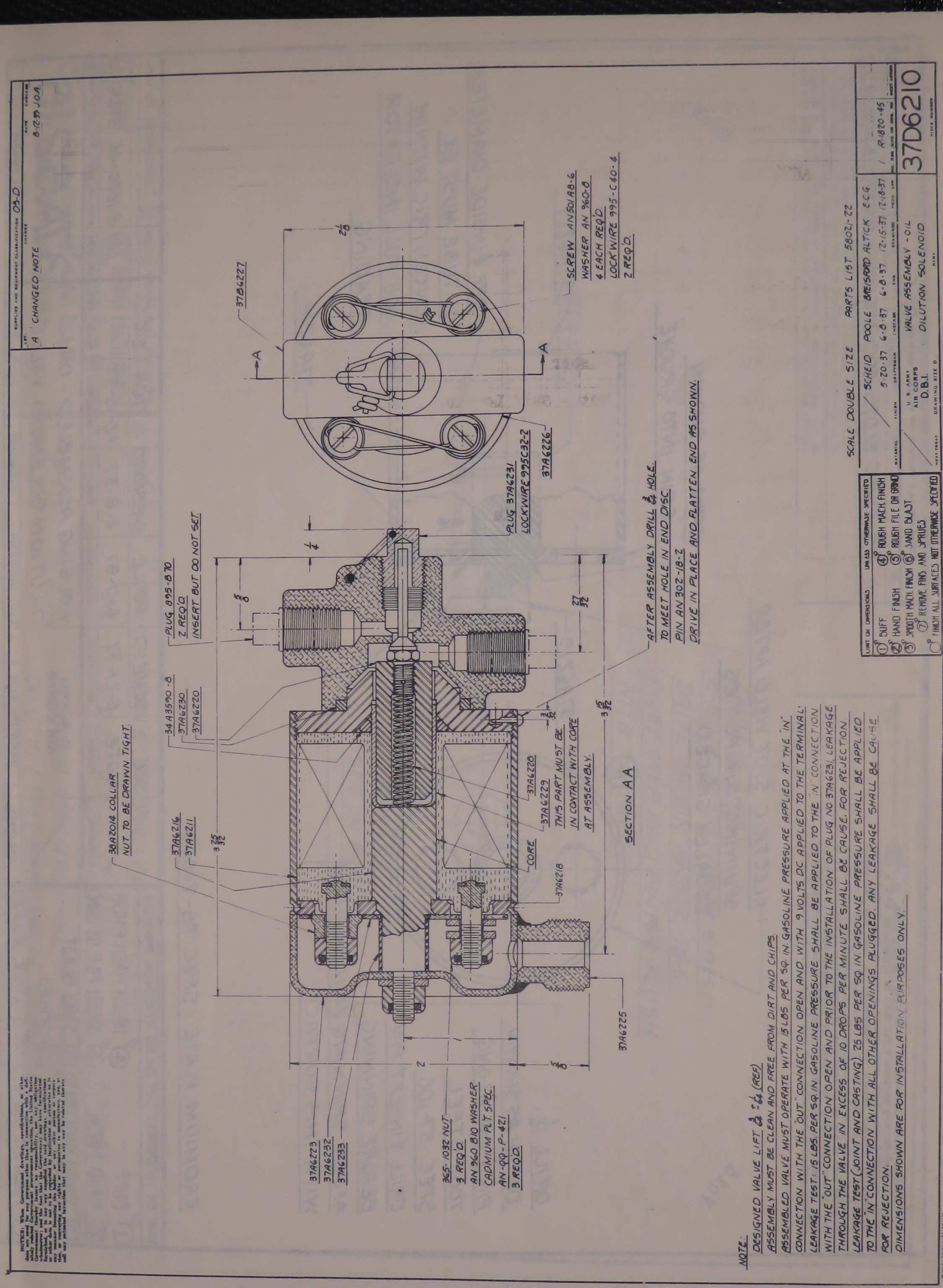

Fig. 2. Assembly Drawing 37D6210.

NOTICE: When Government drawings, specifications, or other data are used for any purpose other than in connection with a definitely related Government procurement operation, the United States Government thereby incurs no responsibility, nor any obligation whatsoever; and the fact that the Government may have formulated, furnished, or in any way supplied the said drawings, specifications, or other data is not to be regarded by implication or otherwise as in any manner licensing the holder or any other person or corporation, or conveying any rights or permission to manufacture, use, or sell any patented invention that may in any way be related thereto.

SUPPLIES AND EQUIPMENT CLASSIFICATION 01-I

LET.	CHANGE	DATE	CHECKER
A	REMOVED SLOTS-ADDED GROOVE, PIN ETC.	3-1-38	R.J.G.

Void

ELECTRIC SPOT WELD AFTER SPINNING, SIX PLACES EQUALLY SPACED.

SPIN AS SHOWN

SPIN INTO GROOVE

37A6219

37A6217

DRILL 1/16. DEPTH AS SHOWN. PIN 1/16 DIA. 1/8 LONG. TOOL STEEL SPEC. 57-108. DRILL & INSERT PIN BEFORE SPINNING.

AFTER SPINNING FINNISH FLUSH WITH THIS SURFACE.

15/64

3/16

CORE & INSIDE DIAMETER OF TUBE MUST BE CONCENTRIC WITHIN .005 FULL INDICATOR READING.

37A6218

CADMIUM PLATE - SPEC. 98-20006

LIMIT ON DIMENSIONS — UNLESS OTHERWISE SPECIFIED

① BUFF ④ ROUGH MACH. FINISH
② HAND FINISH ⑤ ROUGH FILE OR GRIND
③ SMOOTH MACH. FINISH ⑥ SAND BLAST
⑦ REMOVE FINS AND SPRUES
FINISH ALL SURFACES NOT OTHERWISE SPECIFIED

MATERIAL	SEE NOTE	SCHEID	POOLE	BREISFORD	ALTICK	E.C.G.	1	R-1820-45	37D6210
	FINISH	5-21-37	6-7-37	6-8-37	12-15-37		NO. REQ.	MOD. OR ORD. NO.	NEXT ASSEM
HEAT TREAT.	U. S. ARMY AIR CORPS		HOUSING ASSEMBLED - OIL DILUTION SOLENOID VALVE				37A6216		
	DRAWING SIZE A		NAME				PIECE NUMBER		

Wright Field 2-1-38-43M

Fig. 3A. Sub-assembly Drawing No. 37A6216

NOTICE: When Government drawings, specifications, or other data are used for any purpose other than in connection with a definitely related Government procurement operation, the United States Government thereby incurs no responsibility, nor any obligation whatsoever; and the fact that the Government may have formulated, furnished, or in any way supplied the said drawings, specifications, or other data is not to be regarded by implication or otherwise as in any manner licensing the holder or any other person or corporation, or conveying any rights or permission to manufacture, use, or sell any patented invention that may in any way be related thereto.

SUPPLIES AND EQUIPMENT CLASSIFICATION 01-I

LET.	CHANGE	DATE	CHECKER

Void

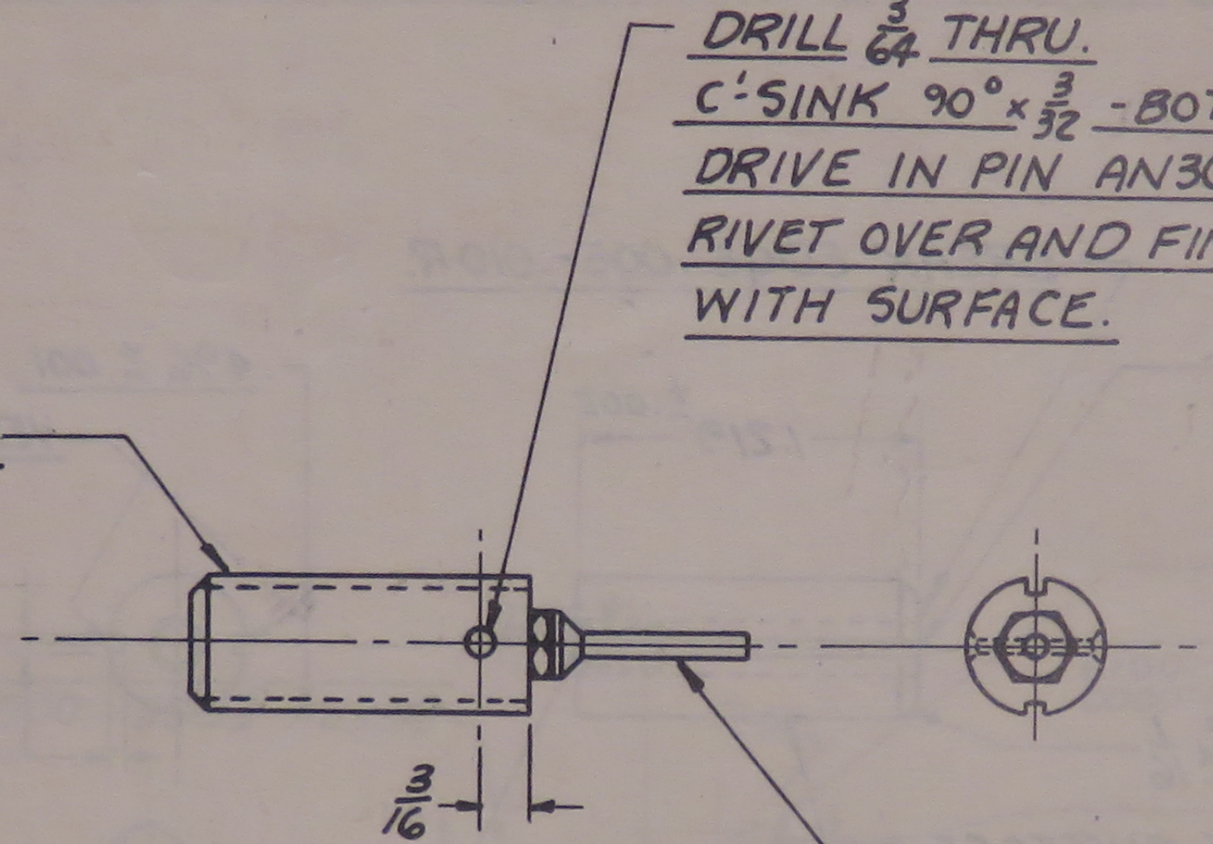

Fig. 3B. Sub-assembly Drawing No. 37A6220

LIMIT ON DIMENSIONS ± 1/32 UNLESS OTHERWISE SPECIFIED

① BUFF ④ ROUGH MACH. FINISH
② HAND FINISH ⑤ ROUGH FILE OR GRIND
③ SMOOTH MACH. FINISH ⑥ SAND BLAST
⑦ REMOVE FINS AND SPRUES
FINISH ALL SURFACES NOT OTHERWISE SPECIFIED

MATERIAL	FINISH	SCHEID 5-21-37 DRAFTSMAN	POOLE 6-2-37 CHECKER	BREISFORD 6-8-37 ENG.	ALTICK 12-14-37 EXAMINED	E.C.G. PROD. APP.	1 NO. REQ.	R-1820-45 MOD. OR ORD. NO.	37D6210 NEXT ASSEM
HEAT TREAT.	U. S. ARMY AIR CORPS DRAWING SIZE A	PLUNGER ASSEMBLY - OIL DILUTION SOLENOID VALVE NAME					37A6220 PIECE NUMBER		

Fig. 4. Detail Drawing No. 37A6221

14.

NOTICE: When Government drawings, specifications, or other data are used for any purpose other than in connection with a definitely related Government procurement operation, the United States Government thereby incurs no responsibility, nor any obligation whatsoever; and the fact that the Government may have formulated, furnished, or in any way supplied the said drawings, specifications, or other data is not to be regarded by implication or otherwise as in any manner licensing the holder or any other person or corporation, or conveying any rights or permission to manufacture, use, or sell any patented invention that may in any way be related thereto.

SUPPLIES AND EQUIPMENT CLASSIFICATION			
LET.	CHANGE	DATE	CHECKER

Fold

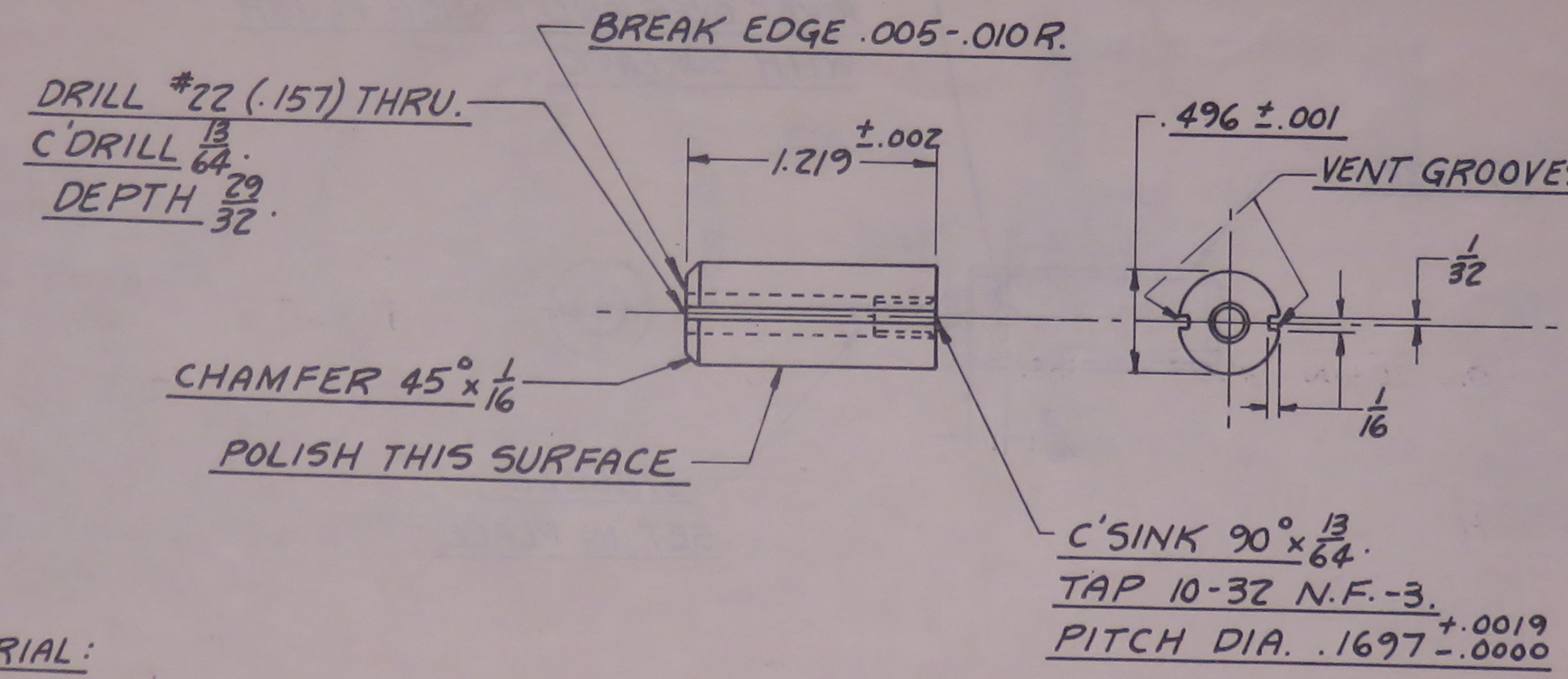

MATERIAL:
ANNEALED IRON OR
S.A.E. 1010 STEEL.
③ A.O.

LIMIT ON DIMENSIONS ±.010 UNLESS OTHERWISE SPECIFIED

① BUFF ④ ROUGH MACH. FINISH
② HAND FINISH ⑤ ROUGH FILE OR GRIND
③ SMOOTH MACH. FINISH ⑥ SAND BLAST
⑦ REMOVE FINS AND SPRUES
FINISH ALL SURFACES NOT OTHERWISE SPECIFIED

SEE NOTE	CADMIUM PLATE 98-20006	SCHEID 5-21-37	POOLE 6-7-37	BREISFORD 6-8-37	ALTICK 12-14-37	E.C.G.			
MATERIAL	FINISH	DRAFTSMAN	CHECKER	ENG.	EXAMINED	PROD. APP.	NO. REQ.	MOD. OR ORD. NO.	NEXT ASSEM
SEE NOTE	U. S. ARMY AIR CORPS	PLUNGER - OIL DILUTION SOLENOID VALVE					1	R-1821-45	37A6220
HEAT TREAT.	DRAWING SIZE A	NAME					PIECE NUMBER		

37A6221

Wright Field 2-1-38-42M

Fig. 5. Detail Drawing No. 37A6222

15.

NOTICE: When Government drawings, specifications, or other data are used for any purpose other than in connection with a definitely related Government procurement operation, the United States Government thereby incurs no responsibility, nor any obligation whatsoever; and the fact that the Government may have formulated, furnished, or in any way supplied the said drawings, specifications, or other data is not to be regarded by implication or otherwise as in any manner licensing the holder or any other person or corporation, or conveying any rights or permission to manufacture, use, or sell any patented invention that may in any way be related thereto.

SUPPLIES AND EQUIPMENT CLASSIFICATION 01-I

LET.	CHANGE	DATE	CHECKER

Void

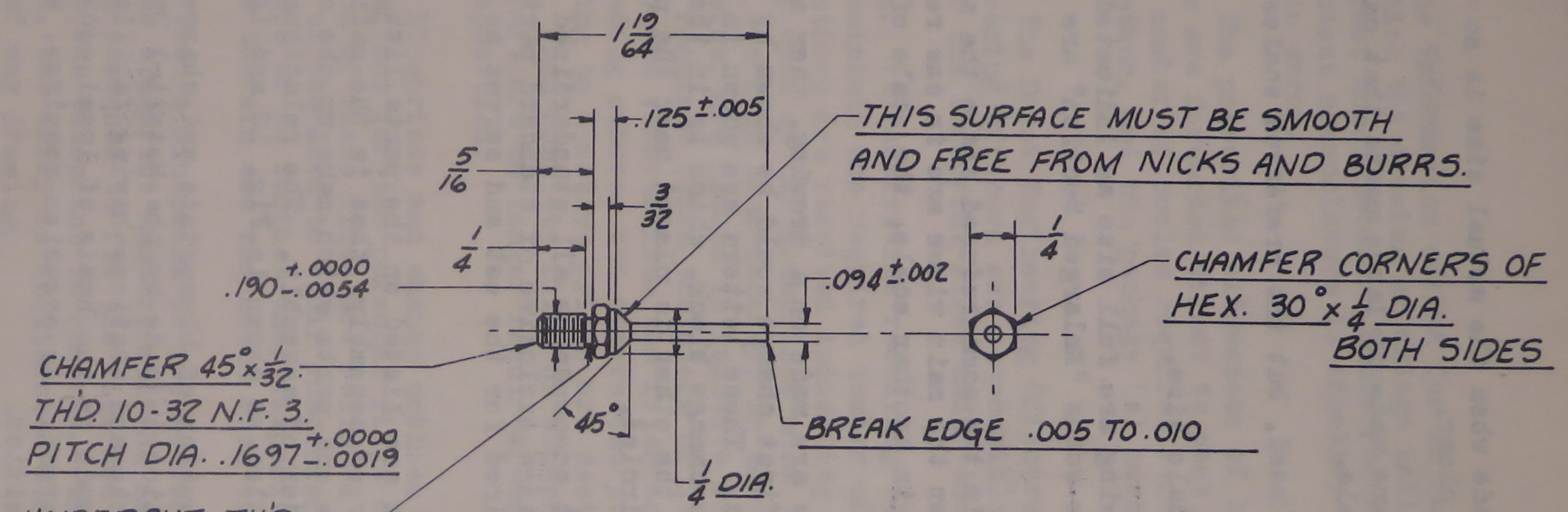

MATERIAL:
COPPER NICKEL ALLOY.
TYPE I - CLASS A.
③ A.O.

LIMIT ON DIMENSIONS ±.010 UNLESS OTHERWISE SPECIFIED

① BUFF
② HAND FINISH
③ SMOOTH MACH. FINISH
④ ROUGH MACH. FINISH
⑤ ROUGH FILE OR GRIND
⑥ SAND BLAST
⑦ REMOVE FINS AND SPRUES
FINISH ALL SURFACES NOT OTHERWISE SPECIFIED

MATERIAL	FINISH	DRAFTSMAN	CHECKER	ENG.	EXAMINED	PROD. APP.	NO. REQ.	MOD. OR ORD. NO.	NEXT ASSEM
SEE NOTE	AS NOTED	SCHIED 5-8-37	POOLE 6-8-37	BREISFORD 6-8-37	ALTICK 12-14-37	E.C.G.	1	R-1820-45	37A6220

HEAT TREAT. | DRAWING SIZE A: U. S. ARMY AIR CORPS | NAME: VALVE - OIL DILUTION SOLENOID. | PIECE NUMBER: 37A6222

(2) Enlarged drawings are made when the actual size is so small or so crowded that the drawing is not clear.

(3) Reduced scale drawings are made of large parts that can be shown just as clearly in a smaller scale.

(4) Any convenient scale is used, but the preferred scales are 2, 4, 1/2 and 1/4 sizes.

(5) All drawings indicate scale size.

(6) When all views of a drawing are full size as indicated and one or more sections are enlarged, the words "Enlarged Section" are placed under that section.

(7) When all the views are in the same reduced scale the scale is noted just above the title block. When the main views are in one reduced scale and other views or sections are in another scale, the scale of each view or group of views is shown.

e. Drawing changes. When changes are made on a drawing, they are indicated by change letters, i.e., the first change would be shown by the letter "A", the second by the letter "B", etc. These letters are shown in two places on the drawing; one will appear in the change block, which is in the upper right hand corner of the drawing, and the other is placed near the part affected by the change. This letter is encircled.

f. Parts lists. (1) A parts list accompanies all standardized designs for which there are four or more drawings exclusive of standard parts. This list is an index to the drawings required for the set and serves as a catalog for service activities.

(2) The order in which parts are listed on the parts list as a general rule follows the reverse order of assembly, that is the main assembly is listed first, the sub-assemblies and parts which make up the main assembly are listed in the reverse order of assembly. The relationship of parts is indicated by indenture of titles as shown in Fig. 1C and 1D.

g. Distribution. (1) The distribution of blueprints and change notices covering Air Corps equipment and supplies is made by the Materiel Division. Regular distribution to Air Corps depots and stations having facilities for accomplishing the work prescribed is made on the basis of local equipment, stock on hand affected, and work performed. As occasion requires, additional distribution is made without requisition.

(2) Whenever activities require copies of any blueprints or change notices, or information pertaining thereto, requests are forwarded to the Materiel Division, Wright Field, Dayton, Ohio. Requests if for copies of blueprints and change notices, includes the following information.

(a) The number and nomenclature of the blueprint desired.

(b) The number and change letter of the change notice desired.

(c) The number of copies desired.

NOTE: When the information called for in (a) or (b) above is unknown, the article for which the drawing or change notice is desired, should be referred to by correct nomenclature. Radio requests involve brevity but must contain sufficient nomenclature to identify the item in event the part number is quoted in error.

(3) The prescribed allowances of blueprints and accompanying change notices are forwarded direct to post commanders. To aid local distribution the number of copies required for each file are separately wrapped and bound together, and the package (s) marked for the activity for which intended.

(4) The Depot Engineering Officers, Depot Supply Officers, and Station Engineering Officers are responsible for the proper filing, care and maintenance of the blueprint files under their jurisdiction.

h. Filing. (1) Activities receiving blueprints and accompanying change notices will maintain the required number of complete and up-to-date files. When change notices are received indicating that individual drawings are no longer active, such of the blueprints made inactive thereby as pertain to equipment, or stock on hand locally, or that may be required for future reference otherwise, are placed in inactive files. When individual drawings are no longer required (when the stock of items affected has been disposed of, etc.) they are removed from the files and destroyed. On receipt of blueprints superseding others, the superseded prints are destroyed. Change notices applying to inactive prints are destroyed with the prints to which they pertain. When complete files of blueprints pertaining to a particular model of aircraft are no longer required, the Materiel Division is requested to furnish disposition.

(2) Blueprints and change notices are distributed for official files only, and not for the personal files of individuals. When persons having supervision of these files are relieved from such assignments, they will turn over all of the data to their successors. When blueprint files are discontinued or are of no further use, disposition of the active blueprints and change notices therein are requested from the Materiel Division.

(3) When a blueprint is issued from file, the name of the using individual, the blueprint number, and the date of issue is entered on a suitable loan card designed to fit the file and placed in the file in the location from which the blueprint is removed. When the loaned blueprint is returned to file, the entry is obliterated and the loan card used for subsequent issues of any drawing.

(4) Each blueprint is neatly folded, plain side out, to a uniform size to fit the file drawers available. The folding is such that the outer fold envelops the remaining ones so that only the one folded edge is visible at the top when placed in file drawers. The blueprint number is marked on the upper right-hand corner of each folded print to enable the number to be readily seen without removing the print from the file drawer and unfolding. Blueprints (both Air Corps and manufacturers' drawings) may be filed by either of the following methods.

(a) Numercial sequence regardless of manufacturer or type of equipment. In this method of filing, the numerical sequence is determined by giving preference to the digits of the number from left to right as it is normally read. The letter or letters prefixed or suffixed to a number is given secondary consideration; i.e., if two blueprints bear the same basic number; A760 and BD760, the number "760" is the primary consideration in determining the order of filing, with "A760" preceding "BD760" because of the alphabetical sequence. A letter or letters placed interdigital is given the same consideration as a numeral; i.e., considering the number "32A760", the number "32" should be considered first, the "A" next, and the number "760" last. The following list of numbers is given as an example of proper numerical sequence:

760	1B542	30-156A
A760	1B542-1	P30-157
BD760	1W041	067920
M1236	1x758	166800
01A004	1x759	166804-1
01A005-1	013241	3A3650
01A100	30-154	3C1592
1B540	30-155	304826

(b) Numerical sequence by manufacturer. In this method of filing all drawings pertaining to a particular manufacturer, also all Air Corps drawings, are filed numerically in separate groups, regardless of type or model of equipment. The numerical sequence is the same as the Technical Order Parts Catalog for the equipment. Under this system, the group of drawings for Douglas parts would contain in numerical sequence, drawings pertaining to B-18, O-43, C-32, C-33, and C-34 airplanes or any other airplanes manufactured by the Douglas Company, while the Pratt & Whitney group would contain drawings on R-985, R-1535, R-1830 or any other engines manufactured by the Pratt & Whitney Company. Air Corps drawings filed under this system are arranged first by year, i.e., 36, 37, 38, etc., then each year group is arranged according to the drawing serial number regardless of the interdigital letter which indicates only the size of the drawing.

(c) Blueprints are readily located in the files by obtaining the identifying blueprint number from one of the following references covering the equipment involved:

Drawing Parts List
Stock List
Handbook of Instructions (Parts Catalog).
Assembly Drawing.

(d) Blueprints forming a part of the Air Corps Standards Book are kept in that book and not in a numerical file.

(e) The drawing parts list forms a part of the complete set of blueprints covering that article. These parts lists are filed alphabetically by title of equipment, as "Airplane, bombardment, type B-18, "Airplane, observation, type O-47", etc. When required to facilitate ready reference, a numerical index of drawing parts lists is kept on 3 by 5-inch cards. The cards contain the parts list number and the name and type of the

equipment to which it pertains, with such other identifying information as is pertinent. When a complete set of blueprints is wanted for a given piece of equipment, or for a component sub-assembly of the equipment, the prints may be obtained from files by consulting the parts list table.

(f) Change notices bear the blueprint numbers to which they pertain and are filed numerically as outlined above for blueprints. They are maintained either in a separate file or interspersed in the blueprint file with the blueprints to which they pertain. If filed in a separate file, they are readily located by means of the blueprint number to which they pertain and by the change letter which also appears on the changed blueprint.

i. Drawing change notices. Drawing change notices (Fig. 6) are issued for the purpose of maintaining up-to-date blueprint files and contain information pertaining only to changed drawings and blueprints. The lower portion of the form, titled "Service Change Notice" is used for including information references to Technical Orders that contain instructions for reworking or changing the equipment. Change notices also contain instructions for the disposition of stock that is not to be continued in service. At stations where no supply file is maintained, drawing change notices containing instructions for the disposition of stock, prior to being filed are routed through the Station Supply office for information and necessary action.

9. Specifications--a. Specifications are official publications covering the procurement requirements of the Government for materials and equipment, and for processes in connection with the production thereof.

b. (1) When referring to specification numbers in Air Corps publications, and it is intended that the current revision of the specification be used, the basic number only is given in the publication. This is interpreted as meaning the current revision.

(2) When for any reason either the basic specification or a specific revision thereof is intended, the date of the basic specification, or the revision letter and date of the specific revision, is used.

c. Specifications pertaining to the Air Corps are classified as follows:

(1) Material and Process Specifications Applicable to the Air Corps. These specifications, both standard and tentative standard, are listed in Materiel Division Bulletin No. 23 compiled by the Chief of the Materiel Division. This bulletin, which is revised monthly, is published for the purpose of providing a convenient and up-to-date list of Air Corps tentative, Federal and U. S. Army specifications that are approved for use in connection with U. S. Army aircraft.

(2) U. S. Army Specifications. The index of U. S. Army specifications lists all approved specifications applicable to the various agencies of the Army. This index, which is revised annually, is published by The Adjutant General as of January 1 and is usually available for distribution within six months from that date. The U. S. Army Index includes only specifications for standard equipment.

Mat. Div. A. C. 17-Wright Field 11-3-38-4M

AIR CORPS—MATERIEL DIVISION—DAYTON, OHIO

LOT No. XX-17127

REFERENCE NO. 69797

DRAWING CHANGE NOTICE

DRAWING No. 37D6210

CHANGE LETTER A

AFFECTING Oil Dilution Solenoid Valve

DATE 3-1-38

NAME VALVE ASSEMBLY - OIL DILUTION SOLENOID

CHANGE

A-Removed test note "Assembled Valve Must Function Satisfactorily When Subjected to 10 Lbs. Per Sq. Inch Fuel Pressure And 9 Volts Are Applied To Terminals. Test Valve For Leaks At 10 Lbs. Per Sq. Inch Fuel Pressure" and added note "Assembled Valve Must Operate With 15 Lbs. Per Sq. In. Gasoline Pressure Applied At The IN Connection With The OUT Connection Open and With 9 Volts D.C. Applied To The Terminals. Leakage Test:- 15 Lbs. Per Sq. In. Gasoline Pressure Shall Be Applied To The IN Connection With the OUT Connection Open And Prior To The Installation Of Plug No. 37A6231. Leakage Through The Valve In Excess of 10 Drops Per Minute Shall Be Cause For Rejection. Leakage Test (Joint And Casting):- 25 Lbs. Per Sq. In. Gasoline Pressure Shall Be Applied To The IN Connection With All Other Openings Plugged. Any Leakage Shall Be Cause For Rejection" instead.

REASON FOR CHANGE

To clarify test requirements.

AUTHORITY GEORGE C. KENNEY, Chief, Production Engr. Sec.

ISSUED BY REVISION UNIT, DRAFTING AND RECORDS BRANCH

E. A. Zahn

SERVICE CHANGE NOTICE

FIELD SERVICE SECTION.

WRIGHT FIELD, DAYTON, OHIO

CHANGE ORDER

August 31, 1939
Class. 03-D

Void

DISTRIBUTION

M. L. #1

HUGH A. BIVINS, Major, Air Corps
Chief, Field Service Section

Fig. 6. Change Notice For Drawing 37D6210.

(3) Federal specifications. Federal specifications are those covering materials and supplies, the requirements for which are common to all agencies of the Government. These specifications are indexed in Section IV of the Federal Standard Stock Catalog. This index is revised semi-annually. Federal Specifications covering materials approved for use in aircraft are listed in Materiel Division Bulletin No. 23.

d. (1) The distribution of specifications in connection with Air Corps procurements, and to activities of the Air Corps, is made by the Chief of the Materiel Division. These publications are distributed for official files, and are not for the personal files of individuals. Stations and organizations to which specifications are furnished will maintain a separate file of these publications. They are filed in numerical sequence. When individuals having supervision over specification files are relieved from their assignment, they turn all such files over to their successors. When an activity is discontinued, disposition of these files is requested from the Chief of the Materiel Division. General distribution of specifications to Air Corps activities and agencies other than the Materiel Division is covered by A. C. Circular 5-4. Specifications furnished to Air Corps activities normally consists of those listed in Materiel Division Bulletin No. 23; however, any others that are available are supplied upon request listing actual requirements therefor, by the Chief of the Materiel Division.

10. Technical Orders, Radiograms And Telegrams--a. General. (1) Air Corps Technical Orders are directives published by order of the Chief of the Air Corps for the purpose of issuing specific instructions and information of a technical nature covering the operation, maintenance, storage, inspection, etc., of Air Corps equipment and materials and for the establishment of a uniform system of files wherein such data is readily accessible.

(2) Unless otherwise directed, Technical Orders are compiled, printed, and distributed by the Chief of the Materiel Division, Wright Field, Dayton, Ohio. Those involving any changes in prescribed policies, that introduce new policies or affect inspection practices, or otherwise fall beyond the scope of routine technical instructions, are in each case submitted to the Chief of the Air Corps for approval prior to publication.

(3) Active Technical Orders are revised from time to time to keep them up-to-date and to combine, wherever possible, each group of related subjects into one Technical Order. Notification of new issues, and of those revised, rescinded, or replaced is published in a currently revised index.

(4) All technical instructions as defined in par. a (1) are issued as Technical Orders. This permits consolidation of complete files of technical instructions into one numerical sequence and enables all technical instructions and information relating to individual airplanes, engines, etc., to be included in individual binders, if desired, for the convenience of crew chiefs, inspectors, and other individuals whose duties require constant use of such limited files.

b. Form and Printing--(1) All issues of Technical Orders are published in loose leaf form, letter size, with the lefthand margin punched for filing

in standard Air Corps stock list and maintenance publication binders, 11 x 8-1/2", telescopic, 3 post, Specification 50097. If the number of sheets in any one Technical Order warrants, they are fastened together with clips at the time of printing. Handbooks of Instructions are published 11 x 8-1/2" in size with Technical Order numbers assigned, and are filed in proper numerical sequence with all other Technical Orders. Older types of active handbooks not suitable for filing in standard 11 x 8-1/2" binders are retained in a separate file until such time as they are rescinded or replaced by new publications.

(2) Whenever a Technical Order replacing other publications is issued, the new order has the following note, listing the publications replaced and their dates of issue, under the title on page one of the order:

"This Technical Order replaces .....dated....."

Owing to the nature of their contents, Technical Orders are considered as restricted documents. Each Technical Order is accordingly marked conspicuously "RESTRICTED" at the top of page one of the order.

(3) Inclosures are not ordinarily distributed with Technical Orders, but are, whenever possible, included in the text as figures, tables, etc., on pages forming a part of the Technical Order.

c. Titles. (1) The title of each Technical Order consists of two parts, as follows:

(a) The first, known as the "general title" is that of the general Air Corps property class of the equipment to which the order pertains; for example, "Airplanes and Spare Parts", "Engines and Spare Parts", etc.

(b) The second, known as the "subtitle", indicates as precisely as possible the nature of the contents and the particular equipment or part to which the order pertains; for example, "General--Cleaning of Aeronautical Equipment", etc.

d. Numbering. For purpose of identification, indexing, and filing, Technical Orders are assigned numbers consisting of two or more parts, as follows:

(1) The first part of the number is in all cases that of the general Air Corps property class covered, except that the "00" series is established for indexes, and orders pertaining to the subject of publications, systems, and miscellaneous instructions that cannot be otherwise classified. For example: The number "06" is the first part of the number of all Technical Orders pertaining to Fuels and Lubricants, Class 06.

(2) The second part is a number assigned to identify all the Technical Orders pertaining to a particular subdivision (type, model, etc.) of the general property class covered. For example, referring to the numerical list of Technical Orders in the Index: Under the general Class 06, Fuels and Lubricants, the number "5" is assigned to all Technical Orders covering fuels; the number "10" to those covering lubricants, etc.

(3) The third part of the number consists of serially numbering, beginning with the number "1" in the order of issue, the individual Technical Orders of each subdivision of a general property class, a separate series of numbers being used for each subdivision. For example, under Class 06 and subdivision 10, Lubricants, all Technical Orders on this subject are numbered in the order of this issue, as follows:

"06-10-1", "06-10-2", "06-10-3", etc.

The parts comprising a complete Technical Order number are always separated by dashes. When amendments are issued as separate publications, these are designated in the order of their issue by adding a suffix letter to the Technical Order number. For example: The first amendment to Technical Order 13-5-2 is numbered 13-5-2A, the second 13-5-2B, etc. Letter suffixes may also be used for insuring a file location adjacent to a particular technical order previously issued, when the next consecutive serial number has been previously assigned.

(4) (a) Technical Orders that constitute the complete basic or general treatise covering airplanes and engines are composed of four parts as follows. This also applies to basic Technical Orders covering other items of equipment whenever practicable.

1. Operations and Flight Instructions (Information normally required by pilot).

2. Service Instructions (For maintenance personnel).

3. Overhaul Instructions (For Depot overhaul operations).

4. Parts Catalog.

(b) Technical Orders of this class are assigned basic numbers consisting of the two parts outlined in (1) and (2) above. These numbers apply to the entire handbook and are so indicated on the title page. In order to provide, however, for separate distribution of individual parts of the handbooks, the four parts referred to above are further identified by appending "-1" to "-4" to the basic handbook number. For example, the complete Handbook of Instructions covering the PB-2A airplane will be Technical Order 01-5D. In this case the first part of the number "01" is that of the general property class "Airplanes and Spare Parts, Class 01". In the second part the number "5" designates Consolidated Airplanes generally, with the letter "D" assigned to the PB-2A model of that manufacturer. The four parts of the Handbooks are distinguished as follows:

01-5D-1 Operations and Flight Instructions.
01-5D-2 Service Instructions.
01-5D-3 Overhaul Instructions.
01-5D-4 Parts Catalog.

(c) Thus, the complete Handbook, Technical Order No. 01-5D, is in reality composed of four technical orders, numbered 01-5D-1 to -4 inclusive. These are distributed and filed either singly, or as a complete

handbook, as indicated by the files symbols referred to in paragraph h (3). Technhical Orders of this class are usually amended by issuance of revised pages to be inserted in their proper place in the original publication. Amendments issued as separate publications, or subsequent publications pertaining to the same equipment as the basic handbook, are serially numbered by adding a third part to the basic number following the sequence assigned to the four parts referred to.

(5) When succeeding models of the same equipment require the issue of new handbooks covering only the new models, the second part of the new Technical Orders have appended to the basic handbook number an additional letter in alphabetical sequence in the order of issue, to denote the identity of the different models and the order of filing. For example, in the case of Pratt & Whitney engines "02-10D" is the basic handbook number for the R-1340 series, and successive handbooks covering the various models are as follows:

02-10DA, the -11 to -29 models.
02-10DB, the -33 model.
02-10DC, the -39 to -47 models, etc.

(6) When the numbering of existing Technical Orders does not conform to the foregoing, corrected numbers are assigned and indexed, wherever possible, as each Technical Order is republished.

e. Technical Orders Requiring Inspections or Changes to Equipment. (1) Whenever Technical Orders are to be issued containing instructions requiring the use of drawings, materials, facilities, or additional funds that may not be on hand in the activity concerned, such orders are not distributed until the necessary drawings, materials, facilities, or funds are available for compliance therewith.

(2) Each Technical Order that contains instructions requiring non-periodic (one-time) inspections or changes to equipment contains in the first paragraph thereof or in a notation in the heading, a statement as required by A. C. Circular 15-60, outlining when the work should be performed and whether by service activities or depots. Likewise, each Technical Order that contains instructions requiring routine or periodic inspections or maintenance work, includes in the first paragraph thereof, or in a notation in the heading, appropriate reference to compliance with the provisions of Technical Order 00-20A and the entering of such instructions in the prescribed manner on Air Corps Forms No. 41-A.

f. Preliminary Instructions--Where time or other conditions do not permit the preparation of more complete instructions, such installation, operation and service maintenance instructions as may be available are marked "preliminary", and are assigned Technical Order numbers. This procedure has been adopted to expedite distribution of advance information in a form that can be indexed and included in Technical Order files. These orders are distributed for information purposes only, being in some cases unedited recommendations of the manufacturer, and do not, therefore, require the requisitioning, use or installation of the article described therein, unless so stated specifically.

g. Index. (1) A loose leaf index, titled "Index of Technical Instructions and Information", listing all active technical instructions and currently revised as of each month by the issuance of revised pages, is published as Technical Order number 00-1.

(2) Revised pages listing all new or revised publications issued and those rescinded or replaced are published monthly. Each change listed on the revised pages is marked with an asterisk so that all revisions are readily apparent. Upon receipt, all Technical Order files are checked to conform to the changes indicated, and the new pages are inserted in their proper places in the index. The pages replaced thereby are removed and destroyed. As new publications are received, the numbers, titles, dates and files symbols are entered in the numerical section of the index. These entries are maintained until receipt of subsequent revision page containing the changes.

h. Filing. (1) Technical Orders are arranged in numerical sequence in standard Air Corps binders, 11 x 8-1/2", telescopic, 3 post, Specification 50097. Sufficient binders for all technical files at each station activity, if not on hand, are requisitioned on the control depots (Class 25) and all active Technical Orders are filed therein. The numerical sequence for filing Technical Orders is determined as follows:

(a) Each group of Technical Orders of the same general property class are filed in groups, in the order of the property class number. For example: All 01 series first, all 02 series next, etc.

(b) All the publications in each general property class are, in turn, arranged numerically in the order of each subdivision (model, type, or class of property) as indicated by the second part of the Technical Order numbers. For example: In the group of 01 series, all 01-1 numbers are grouped first, all 01-5 numbers second, all 01-10 numbers third, etc., with these, in turn, having the individual orders in each group further arranged in numerical sequence as determined by the serial numbers forming the third part of the numbers. Example of proper filing sequence are as follows:

01-1-	01-5A-1	02-1-1	02-20-5	06-1-1A
01-1-2	01-5A-2	02-1-2	02-20A	06-10-1
01-1-3	01-10A	02-10D-1	02-20A-1	
01-5-1	01-15-1	02-10DA-1	02-20A-2	
01-5-2	01-15-2	02-10DB-1	02-20B-1	
01-5A	01-15-3	02-20-1	06-1-1	

(2) Rescinded publications are removed from the files and destroyed. On receipt of new publications replacing those in the files, the replaced publications are immediately removed and destroyed, and the new ones inserted in their places.

(3) Each Technical Order has the following note printed in the heading of page one, listing the letter symbols of the files for which the order is intended, as contemplated in Technical Order 00-25-3: "For Files.....".

i. Technical Orders to be Included in Pilots' Information File--(1) Whenever the information contained in Technical Orders is of such a nature that it should be brought to the attention of all flying personnel, regardless of station, the heading of the Technical Order contains the following statement:

"A copy of this Technical Order will be placed in the general section of the Pilots' Information File prescribed by A. C. Circular 45-7".

(2) Whenever the information contained in Technical Orders is of such a nature that it should be brought to the attention of all flying personnel at specific stations, the heading of the Technical Order contains the following statement:

"A copy of this Technical Order will be placed in the special section of the Pilots' Information File prescribed by A. C. Circular 45-7".

(3) Whenever the information or instructions in Technical Orders contemplated in (1) and (2) above affect safety of flying, the statements referred to in the heading of the Technical Orders are as follows:

"These instructions affect safety of flying, and a copy will be placed in the (general) (special) section of the Pilots' Information File prescribed by A. C. Circular 45-7".

(4) A list of the Technical Orders to be maintained in Pilots' Information Files is included in the index referred to in paragraph g. This list is currently revised by the issuance of revised index pages, and only those publications included therein need be retained in the Pilots' Information Files. The "0" files symbol and the special notes called for in (1), (2) and (3) above are for initial identification and distribution only, and are disregarded on publications that are no longer included in the list referred to.

j. Technical Radiograms And Technical Telegrams. In certain emergencies the Chief of the Air Corps directs the Chief of the Materiel Division, by telephone, radio or other means, to immediately issue technical instructions to Air Corps activities. In cases of extreme emergency the Chief of the Materiel Division may issue technical instructions to Air Corps activities in advance of approval by the Chief of the Air Corps. In either of the foregoing cases, the Chief of the Materiel Division issues such emergency technical instructions in the form of Technical Radiograms or Technical Telegrams, marked and serially numbered including appropriate file symbols. Whenever Technical Radiograms or Technical Telegrams are issued, a copy, together with all available supporting information, is forwarded immediately to the Chief of the Air Corps by radio for approval. Technical Radiograms and Technical Telegrams are replaced as soon as practicable by the issuance of suitable Technical Orders. Whenever a Technical Order is issued which in any way affects a prior Technical Radiogram or Technical Telegram, the distribution of this Technical Order includes each activity to which the Technical Radiogram or Technical Telegram was distributed.

11. Parts Catalogs--a. (1) The Parts Catalog comprises a part of the Basic Handbook (Technical Order) for airplanes and engines. It consists of three major divisions, namely, the Numerical List (Fig. 1A), Alphabetical List (Fig. 1B) and the Installation and Assembly List (Fig. 1C and D). The Installation and Assembly List of the Parts Catalog lists all assemblies and parts in the same order as the Parts List (blueprint file) of any article of equipment. That is, it will list the assembly and directly under the assembly it will list all the parts that make up that assembly. The number of the Parts Catalog may be found by referring to Technical Order 00-1, Index of Technical Orders.

(2) If it is necessary to locate the assembly to which a part belongs, the Numerical List in the Parts Catalog for the article to which that part belongs must be consulted. Opposite the part number in the Numerical List, the Alphabetical List page number is given. The Alphabetical List will show the part number, the title and the Assembly List page number. The assembly List shows the title and number of the assembly to which the part in question belongs. The main assembly title can be found on the top of the Assembly List page and all parts that make up that assembly will be listed directly under the assembly.

12. Airplane Operation Instructions- Data Sheets--a. Data sheets containing information essential to the pilot are compiled and distributed as rapidly as performance and flight data become available for each new model of airplane. These are known as "Operation Instructions Data Sheets", and consist of sheets for each model of airplane. Those listed in Section III of the Index of "Technical Instructions and Information", Technical Order 00-1, are pasted or otherwise securely fastened inside of the back cover of the Airplane Flight Report, Air Corps Form No. 1, and thus carried at all times in each airplane of the model covered. Only the sheets so listed in Section III of Technical Order 00-1 are so carried. Initial distribution of these "Operation Instructions Data Sheets" is made by the Materiel Division on the basis of airplane distribution. Additional copies are furnished as needed upon request to that division. It is not contemplated that copies be maintained with the Technical Order in the various files. However, copies pertaining to airplanes on hand may be maintained in the special section of the Pilot's Information File, if desired.

(1) Operation Instructions. The first sheet, titled "Operation Instructions" (Fig. 7A) includes information, consistent with brevity, which a pilot might find useful as a ready reference.

(2) Cruising Data. The second sheet is titled "Cruising Data" (Fig. 7B). This furnishes in tabular form the manifold pressure, R.P.M., true air speed, and gasoline consumption in gallons per hour that may be expected under standard atmospheric conditions for various altitudes, and for three conditions of flight, namely, "High Speed", "Desired Cruising", and"Maximum Range".

(3) Calibrated Speed And Gas Consumption Curves. A third sheet is titled "Calibrated Speed and Gas Consumption Curves". This is normally based on the official performance test of the model concerned, and should provide the pilot with the approximate performance he may expect from an airplane of this model under the conditions indicated. These curves are included in the "Operation and Flight Instructions" section of the Airplane Handbook.

RESTRICTED

Revised December 22, 1939

OPERATION INSTRUCTIONS

OPERATING PERSONNEL WILL READ AND BECOME FAMILIAR WITH INSTRUCTIONS CONTAINED IN TECHNICAL ORDER 01-25C-1 & 02-10CB-1.

ENGINE: Pratt & Whitney R-1830-17 with Carburetor Setting 122. Rated with 100 Octane fuel at 1050 HP at 2550 RPM at 6500', 1025 HP at 2550 RPM at Sea Level, and 1200 HP at 2700 RPM for Take-off. Maximum diving speed - 3185 RPM.

INSTRUMENTS: Oil Pressure: Desired - 75 to 85 lbs/sq.in. Maximum - 90 lbs/sq.in. Min. Cruising - 65 lbs/sq.in. Min. Idling - 15 lbs/sq.in. All at 60°C. oil inlet temperature. Oil temperature: Desired - 50°C to 70°C. Cylinder Head Temperatures, Maximum: Take-off, High Speed, and Climb - 260°C. Cruising, continuous - 235°C. Manifold Pressure, RPM, and Mixture Control - See "ENGINE OPERATING LIMITS".

ENGINE OPERATING LIMITS:

	R-1830-17 with 100 Octane fuel
Take-off, 2700 RPM Max.:	48.5" Hg. Max.
Mixture Control, Below 3500':	Full Rich
Mixture Control, Above 3500':	Automatic
Fuel Consumption, Maximum	123 gal/hr.
Climb and High Speed, 2550 RPM Max.:	39.0" Hg. Max.
Maximum Cruising, 2230 RPM Max.:	33.5" Hg. Max.
Oil Consumption, Max. Allowable:	15 qts/hr.
Desired Cruising, 2230 RPM Max.:	30.5" Hg. Max.
Long Range Cruising, 2150 RPM Max.	28.5" Hg. Max.
Mixture Control for Climb, High Speed, and Cruising:	Automatic

FUEL: Capacity: Normal - 105 gal. (Front main tank, in wing - 40; rear main tank, in wing - 65 gal., including 30 gal. Reserve) Maximum - 162 gal. (Including Auxiliary tank, in fuselage - 57 gal.) Aircraft Engine, Grade 100 (100 Octane) Spec. 2-92.

OIL: Capacity: Normal - 10 gal. Maximum - 13.5 gal. Lubricating - Spec. 2-91. Grade: Summer - 120; Winter - 98.

PERFORMANCE:

	With R-1830-17 (Predicted)	With R-1830-13
Normal Gross Weight - 5605 lbs.		
High Speed at 10,000':	302 MPH	299 MPH
Operating Speed with 75% Power:	287 MPH at 8,500'	277 MPH at 10,000'
Rate of Climb, Sea Level:	4,000'	3,400'
Ceiling, Service:	33,700'	33,700'
Ceiling, Absolute:	34,700'	34,700'

FLYING CHARACTERISTICS: Take-off (Wt. - 5591 lbs. Flaps down 20°. R-1830-13 engine): Speed - 75 MPH. Roll - 454'. Distance to clear 50' obstacle - 900'.

Landing (Wt. - 5591 lbs. Flaps full down): Speed - 72.4 MPH. Roll - 818'. Distance over 50' obstacle - 1429'.

Maneuvers prohibited: Outside loop; inverted flight; inverted spins; snap rolls at more than 150 MPH. indicated; slow rolls at more than 260 MPH, indicated; more than 3 turns of spins; or spins with armament, baggage, or auxiliary fuel. Do not exceed an indicated airspeed of 403 MPH.

PROPELLER: Curtiss electrical, automatic and selective: R-1830-17 - 22.0° to 47.0° at 42" radius. Dia. 10'0". 3 blades (See T.O. 03-20-1).

Set to RPM specified in "ENGINE OPERATING LIMITS". For cruising, after obtaining desired cruising pitch switch to "Manual" to prevent excessive wear.

CARBURETOR AIR HEATER CONTROL: For start and in general run cold. Under icing conditions keep mixture between 3°C. and 5°C.

NOTE: Above performance data is based on performance of P-36A #38-2.

SPECIAL REMARKS APPLICABLE TO THIS AIRPLANE AC#_____.

Fig. 7A. Operation Instructions.

CRUISING DATA

August 15, 1939
DATE PUBLISHED OR REVISED

AIRPLANE MODEL P-36A

ALTITUDE	HIGH SPEED				DESIRED CRUISING				MAXIMUM RANGE			
	MANIFOLD PRESSURE	R P M	TRUE AIR SPEED	FUEL CONS GAL/HR	MANIFOLD PRESSURE	R P M	TRUE AIR SPEED	FUEL CONS. GAL/HR	MANIFOLD PRESSURE	R P M	TRUE AIR SPEED	FUEL CONS. GAL/HR
Sea Level	39.0"	2550	280	117 - 140	30.5"	2230	251	56 - 70	17.0"	1750	143	18 - 22
3000'	39.0"	2550	290	120 - 144	30.5"	2230	260	57 - 71	16.5"	1750	150	19 - 23
6000 '	39.0"	2550	301	122 - 146	30.5"	2230	269	58 - 72	16.0"	1750	156	20 - 24
9000 '	36.0"	2550	302	105 - 125	30.5"	2230	278	59 - 73	15.5"	1750	164	21 - 25
12,000'	32.0"	2550	304	85 - 102	29.0"	2230	286	55 - 69	15.2"	1750	173	22 - 26
15,000'	29.0"	2550	300	70 - 85	26.0"	2230	281	50 - 62	15.0"	1750	180	23 - 27

Fig. 7B. Cruising Data.

(4) Range Chart. An additional sheet is titled "Range Chart", and is based on the performance of a typical airplane of the model concerned. These charts show range in still air as a function of speed, altitude, percent of power, and fuel and bomb load for normal and alternate load conditions. Cruising limitations are also indicated on the chart. The information furnished on these charts is based on the same performance and fuel consumption as the "Calibrated Speed and Gas Consumption Curve". The use of these charts provides a convenient method of predicting the range in air miles that may be expected under various load and operating conditions. These sheets are included in the "Operation and Flight Instructions" section of the Airplane Handbook, and are not carried in Air Corps Form No. 1 or listed in Section III, Technical Order 00-1.

13. Stock Lists--a. Air Corps equipment and supplies are divided into the following property classes:

Class	01	Airplanes And Spare Parts
"	02	Engines And Spare Parts.
"	03	Aircraft Accessories.
"	04	Aircraft Hardware And Rubber Materials.
"	05	Aircraft Instruments And Laboratory Test Equipment.
"	06	Fuels And Lubricants.
"	07	Dopes, Paints And Related Materials.
"	08	Electrical Equipment And Supplies.
"	10	Photographic Equipment And Supplies.
"	11	Aircraft Combat Material.
"	12	Fuel And Lubricating Equipment And Supplies.
"	13	Clothing, Parachutes, Equipment And Supplies.
"	14	Hangars And Other Demountable Building And Parts.
"	16	Balloon Equipment And Supplies.
"	17	Machinery, Shop Equipment And Tools.
"	18	Special Tools.
"	19	Flying Field And Hangar Equipment.
"	21	Cordage, Fabrics And Leathers.
"	22	Woods.
"	23	Metal And Composition Material.
"	24	Chemicals.
"	25	Office Equipment And Supplies.
"	26	School Equipment.
"	29	Commercial Hardware And Miscellaneous Supplies.
"	30	Publications.

b. The articles stored and issued by the Air Corps are listed in Air Corps Stock Lists (Fig. 8) which show the status of each article by means of a code.

c. (1) The number, title and property class, date of issue, and files symbols for each Air Corps Stock List published are listed in a separate section of the Index of Technical Instructions and Information.

(2) Each Stock List is assigned a basic number consisting of the Air Corps property class symbol, preceded by the letter "S" to avoid conflict with Technical Orders bearing the same number. Thus the basic number of the Stock List for Class 07 materials, "Dopes, Paints and Related Materials", is

STOCK LIST

50 CLASS 04-A AIRCRAFT HARDWARE JUNE 1, 1938 50

PART NO.	NAME	CONTROL	STATUS	UNIT OF ISSUE	UNIT COST DOLLARS	UNIT COST CTS.	UNIT COST M	STOCK NUMBER CLASS	STOCK NUMBER NUMBER	CHANGE
270B10	JOINT-AIRCRAFT UNIVERSAL TYPE B 5-8 IN		S NR	EA	1	40		65	445300	*
270B12	JOINT-AIRCRAFT UNIVERSAL TYPE B 3-4 IN		S NR	EA	1	55		65	445400	*
270B16	JOINT-AIRCRAFT UNIVERSAL TYPE B 1 IN		S NR	EA	1	80		65	445500	*
270B20	JOINT-AIRCRAFT UNIVERSAL TYPE B 1 1-4 IN		S NR	EA	2	30		65	445600	*
C643	JOINT ASSY-FUEL COCK CONTROL UNIVERSAL---USE 270B10 JOINT		EXCESS	EA	1	11		65	445620	*
C644	JOINT ASSY-FUEL COCK CONTROL UNIVERSAL---USE 270B12 JOINT		EXCESS	EA	1	20		65	445640	*
34A2631	JOINT ASSY-FUEL COCK CONTROL UNIVERSAL		S R	EA	1	36		65	445660	*
066656	JOINT ASSY-FUEL COCK CONTROL UNIVERSAL		EXCESS	EA		90		65	445680	*
AN276	JOINT-BALL AND SOCKET 1-4 28		S NR	EA		22		65	445700	
KF159	KEY-RECTANGULAR ROUND END 3-16 X 1-8 X 5-8 IN		NS NR	EA		8		65	446000	*
AN875-3	LINER-HOSE 3-16 X .032 IN		S NR	EA		1		65	446900	*
AN875-4	LINER-HOSE 1-4 X .032 IN		S NR	EA		1		65	447000	
AN875-6	LINER-HOSE 3-8 X .032 IN		S NR	EA		15		65	447050	
AN875-8	LINER-HOSE 1-2 X .032 IN		S NR	EA		2		65	447100	*
AN875-10	LINER-HOSE 5-8 X .032 IN		S NR	EA		27		65	447150	
AN875-12	LINER-HOSE 3-4 X .049 IN		S NR	EA		4		65	447200	
AN875-16	LINER-HOSE 1 X .049 IN		S NR	EA		9		65	447250	
38A6136	NEEDLE-INSTRUMENT VACUUM CONTROL VALVE ADJUSTING		S NR	EA		5		65	449000	*
AN4022-1	NIPPLE ASSY-PRIMER SYSTEM JET		S NR	EA		17		65	450000	*
35B1212-1	NIPPLE ASSY-PRIMER SYSTEM JET OLD STYLE		S NR	EA		17		65	450050	*
	NIPPLE-BRASS 1-8 X 1 1-2 IN LONG		NS NR	EA		3		65	450100	*
895-60	NIPPLE-CLOSE 1-8 IN P T		S NR	EA		39		65	451000	*
895-61	NIPPLE-CLOSE 1-4 IN P T		S NR	EA		44		65	451100	*
895-62	NIPPLE-CLOSE 3-8 IN P T		S NR	EA		49		65	451200	*
895-63	NIPPLE-CLOSE 1-2 IN P T		S NR	EA		68		65	451300	*
895-64	NIPPLE-CLOSE 3-4 IN P T		S NR	EA		8		65	451400	*
895-65	NIPPLE-CLOSE 1 IN P T		S NR	EA		10		65	451500	*
895-90	NIPPLE-HEX SHOULDER 1-8 IN P T		S NR	EA		5		65	452000	*
895-91	NIPPLE-HEX SHOULDER 1-4 IN P T		S NR	EA		85		65	452100	*
895-92	NIPPLE-HEX SHOULDER 3-8 IN P T		S NR	EA		85		65	452200	*
895-93	NIPPLE-HEX SHOULDER 1-2 IN P T		S NR	EA		11		65	452300	*
895-94	NIPPLE-HEX SHOULDER 3-4 IN P T		S NR	EA		16		65	452400	*
895-95	NIPPLE-HEX SHOULDER 1 IN P T		S NR	EA		20		65	452500	*
037745	NIPPLE-HOSE FUEL 1-4 IN TUBE---1-8 IN P T		OB NR	EA		7		65	453000	*
037783	NIPPLE-HOSE FUEL 3-8 IN TUBE---1-8 IN P T		OB NR	EA		35		65	453100	*
037719	NIPPLE-HOSE FUEL 3-8 IN TUBE---3-8 IN P T		OB NR	EA		9		65	453200	*
037946	NIPPLE-HOSE FUEL 1-2 IN TUBE---1-4 IN P T		OB NR	EA		12		65	453300	*

Fig. 8. Stock List Sheet

numbered S-07. Subseqient amendments, thereto, or related supply instructions, are issued by appending dash numbers, beginning with the number 1 in the order of their issue, to the basic Stock List number; for example, S-07-1, S-07-2, etc. The Stock Lists now published that are not numbered in accordance with the foregoing have the new numbers printed thereon as they are republished.

(3) Stock Lists are maintained in the respective files designated by the files symbols published thereon. Amendments, and related instructions referred to in (2) above are filed with the basic Stock List to which they pertain.

d. (1) Air Corps Expendable Property is classified by the Air Corps as recoverable and non-recoverable. Such classification does not in any way change the basic status of the property as expendable.

(a) Expendable Articles that can normally be economically restored to use or, that are particularly subject to loss or misappropriation are classified as recoverable.

(b) Expendable articles that are consumed in use or that can not normally be economically restored to use are classified as non-recoverable.

(2) The following code is employed in Air Corps Stock Lists to designate the status of articles as to procurement, storage, and issue:

X - Experimental
ST - Service Test
LP - Limited Procurement
S - Standard
SS - Substitute Standard
LS - Limited Standard
OB - Obsolete
NS - Non-Standard - Articles that are not listed in the Status of Equipment Book and that do not meet standard requirements.

(3) The following status code is employed in Air Corps Stock Lists to designate the status of articles as to expendability:

NX - Non-Expendable - Articles so coded are not dropped from accountable records on Stores Charge.
R - Recoverable - An article so coded will, except as noted in paragraph d be issued only in exchange for a like article.
NR - Non-Recoverable - An article so coded is dropped from accountable records when issued for immediate consumption and is not ordinarily returned to stock.
EXCESS - Articles so coded are expendable items on hand in such quantities that it is desired to stop further reclamation. Items so marked are not reclaimed from equipment being disposed of.

14. Distribution of Technical Orders and Stock Lists--a. Responsibility for Establishment of Required Files. The Commanding Officer of each Air Corps station, depot, detachment, and other Air Corps unit permanently located at other than Air Corps stations, and the Commanding Officer of each National Guard Air Corps unit, establishes and maintains the number of complete and limited files of maintenance publications necessary to meet the needs of his command.

b. Policy Governing Distribution. With the exception of indexes and publications of such nature as to require general distribution, only those that pertain to the equipment assigned a given activity will normally be distributed to that activity. However, stations other than reserve airdromes, intermediate landing fields, National Guard fields, and those garrisoned by Air Corps detachments of less than one-squadron strength, not having equipment on hand, will be regularly furnished copies of all Technical Orders as follows:

One Copy - Station Engineering Office
One Copy - Station Supply Office
One Copy - Station Inspection Office

c. Designation of Files. (1) Air Corps maintenance publications are distributed for the official files of units, organizations and offices. They are not for the personal files of individuals. Whenever an individual having supervision over the files is relieved from his assignment, he turns over all files to his successor. When an activity is discontinued, all files on hand are reported to the Chief of the Materiel Division for disposition. The number of complete and limited files maintained by each activity, unit, or office are governed by the actual local requirements in each case, and special effort is made to have each file efficiently serve as many persons as circumstances permit.

(2) Files containing one copy of each active publication are considered essential for certain offices, sections, etc. These files are known as complete files and are normally maintained only by the activities or agencies cited in paragraph b.

(3) Files containing indexes and only those publications pertaining to equipment on hand or duties of a given activity are known as limited files. Limited files are maintained in offices, departments, shops, sections, flights, etc., for the collective use of personnel involved.

d. Accessibility of Files. It is important that each file be kept where it is the most convenient, for ready reference by all of the personnel concerned therewith. It is particularly important that such information be available to the personnel charged with the completion and inspection of the work involved or the maintenance of the equipment concerned.

e. Special Hangar Files. (1) At least one centralized file of pertinent technical instructions is established and maintained in each hangar wherein Forms No. 41 are maintained, except that where hangar arrangements permit, one file may be made to serve two or more adjacent hangars if desirable and convenient. Except where special conditions exist, only one such file need be maintained in any one hangar. These are limited files containing those publ

cations pertaining to the equipment maintained in the hangars, with such others as are normally required for frequent reference including local orders and instructions or pertinent extracts, etc., as may be issued from time to time by the engineering officer for the care of equipment or the application of the prescribed system of maintenance.

(2) Publications comprising the special hangar file are maintained in suitable stiff-backed binders, the contents of each binder being indicated by means of a label pasted thereon, or other suitable marking. These are kept on a special wall desk of standing height, to be constructed as shown on Air Corps Drawing No. 33B2787, or in a manner similar thereto. Each binder is permanently attached to the desk or adjacent wall by means of a suitable length of light chain.

(3) The completeness and proper maintenance of the hangar files are an administrative responsibility of the organization commander, who establishes the necessary set-up to insure that all personnel concerned are conversant with each new publication, and that the special entries on Forms Nos. 41 and 41A are made as directed in these publications. It is noted that the type of desk shown on Drawing No. 33B2787 provides a back for use as a bulletin board. Each day that new instructions or publications are filed in the binders, there is posted on this bulletin board appropriate notification of each new publication filed, and all personnel concerned are required to indicate by initialing on the notice that they have read and understand each new instruction or publication that has been received and filed.

(4) The required number of desks referred to in (2) above are constructed locally. The necessary binders, suitable for the particular publications required may be obtained by requisition.

f. Aircraft Files. (1) A copy of Technical Order 00-20A (Airplane Maintenance) and the Operation and Service Instruction Sections of airplane and engine basic Technical Orders pertaining to the particular aircraft and engine, are issued for aircraft files. These orders and the current supplements and amendments thereto, bear the file symbol "G", and will constitute a limited file for use of the crew chief and operating crew of the aircraft. They will remain with the aircraft at all times and be kept in Aircraft Data Case, part No. 36D2873, when not being used for reference purposes.

(2) In the case of new airplanes delivered from the plant of a contractor, Technical Order Handbooks covering the airplane and engine will, if available, be placed in the airplane prior to delivery from the plant of the contractor, or if not available at time of delivery of new aircraft, temporary operation instructions are included in lieu thereof, for information of the ferry pilot. The placing of handbooks or temporary operation instructions in airplanes at contractors' plants is a responsibility of the Air Corps representative or Air Corps inspector.

g. Files Symbols. The system of symbols prescribed herein is used to designate and identify the various files and the publications required to be maintained therein. The appropriate file symbol is printed on the title page of each publication. While these symbols fix the files to which publications pertain, it is the responsibility of Commanding Officers to determine the kind

and number of files to be maintained in any given activity. The symbols and distribution indicated thereby are as follows:

Symbol	Distribution Indicated
A	Assigned to indexes and publications of general application that are to be included in all files. For example, "T. O. No. 00-5, General Provisions - Explanation of System" bears symbol "A" as it should be in all files.
B	Assigned to publications that are to be included in the files of transient aircraft crews, and in the engineering, inspection, and supply files of depots, stations, group headquarters, and service squadrons.
C	Assigned to publications that are to be included in the files of station communications offices and organization communications sections.
D	Assigned to publications that are to be included in the files of station armament offices, organization armament sections and Ordnance offices at Air Corps stations or with Air Corps organizations.
E	Assigned to publications that are to be included in the files of engineering and inspection sections of H/A squadrons and detachments.
F	Assigned to publications that are to be included in the files of photo sections.
G	Assigned to publications that are to be carried in aircraft.
H	Assigned to publications that are to be included in hangar files.
M	Assigned to publications that are to be included in the files of engineering, maneuvering and inspection sections of L/A squadrons and detachments.
O	Assigned to publications that are to be included in Pilots' Information Files.
P	Assigned to publications that are to be included in the files of parachute sections.
S	Assigned to publications that are to be included in the files of supply sections of squadrons and detachments.
T	Assigned to publications that are to be included in engineering, inspection, and supply files of depots.

15. Status of Equipment Book--a. Purpose. The Status of Equipment Book is used for recording the status of articles of equipment and supply from

the standpoint of development and suitability for service use.

b. Description. This book contains a complete list of the principal articles of aeronautical equipment used by the Air Corps and the relative status of each. A sample page is illustrated in figure 9. The information required of this book is divided into 8 groups or columns as follows:

(1) Article. This column contains a list of the articles on which a status record is required.

(2) Experimental. This column includes a list of articles which are under development and have not progressed to the stage where engineering tests have indicated that the article has sufficiently satisfactory military characteristics to warrant service tests preparatory to standardization. The type symbol of aircraft in this class is prefixed by the letter "X".

(3) Service test. This column includes a list of articles which have progressed beyond the experimental stage, which appear to possess the desired military characteristics, which have operated satisfactorily in engineering tests conducted and which have been approved for issue in limited quantity for service tests preparatory to their classification as standard. The type symbol of aircraft in this class is prefixed by the letter "Y".

(4) Limited procurement. This column contains a list of articles, which have passed favorable service tests and appear to have suitable military characteristics and which have been approved as to type, but not classified as standard. This approval as to type signifies that the item is probably suited for service use, but requires refinement in design or further use in the service to determine its suitability. The type symbol of aircraft in this class is prefixed by the letter "Y".

(5) Standard. This column contains a list of articles that have been adopted as suitable for use of the Air Corps, are the most advanced and satisfactory of the adopted types and are preferred for procurement to meet supply demands.

(6) Substitute standard. This column contains a list of articles that have been adopted as suitable for the use of the Air Corps, but do not have as satisfactory military characteristics as standard articles. Articles of this group are considered satisfactory substitutes for standard articles and are, when necessary procured to supplement the supply of standard articles.

(7) Limited standard. This column contains a list of articles that have been adopted as suitable for use of the Air Corps, but do not have as satisfactory military characteristics as standard articles. These articles are considered as suitable substitutes for standard articles and are either in use or available for issue to meet supply demands. Complete major units of this group are not reproduced, but component parts and complementary articles, even though they are limited standard articles may be procured if necessary to maintain the complete major unit in serviceable condition.

(8) Obsolete types. This column consists of a list of articles on hand which have been designated as unsuited for further use. The type symbol

AIRPLANE UNIT
AIRCRAFT BRANCH

STATUS OF EQUIPMENT

U. S. ARMY—AIR CORPS
MATERIEL DIVISION

Sheet No. 8

Revised Date October 1, 1940

REQUIREMENT		REQUIRED TYPES						OBSOLETE TYPES
	(1)	DEVELOPMENT TYPES (2)	DEVELOPMENT TYPES (3)	DEVELOPMENT TYPES (4)	ADOPTED TYPES (5)	ADOPTED TYPES (6)	ADOPTED TYPES (7)	(8)
ITEM	ARTICLE	EXPERIMENTAL	SERVICE TEST	LTD. PROCUREMENT	STANDARD	SUB. STANDARD	LIMITED STANDARD	
1	AIRPLANE e. Pursuit (1) Fighter Symbol (P)	Model XFM-1 (Bell) Spec. May 27, 1935 Model XP-38A (Lockheed) Two Allison V-1710-27 Engines Model Spec. C-615-2 Sept.25, 1940 Model XP-49 (Lockheed) Two P & W 1-1430-1 Engines Model Spec. XC-621-1 Sept.25, 1940 Model XP-50 (Gruman) One each Wri. R-1820-67 and -69 Engines Model Spec. XC-621-2 Sept.25, 1940 Model XP-58 (Lockheed) Two P & W XH-2600-1 Engines Spec. Sept.25, 1940	Model YFM-1 (Bell) Two Allison V-1710-23 Eng. Spec. Y-604-1 Aug. 6, 1938 Model YFM-1A (Bell) Two Allison V-1710-23 Eng. Type Spec. - Y-604-1 Aug. 6, 1938 Model YFM-1B (Bell) Two Allison V-1710-41 Engines Model Spec. Y-604-1 Sept.25, 1940		Model P-38 (Lockheed 222) One each Allison V-1710-27 and -29 Engines Model Spec. - C-615-2 Sept.15, 1940			

Fig. 9. Status of Equipment Book Sheet

of aircraft in this class is prefixed with the letter "Z".

c. The approval of the Secretary of War is necessary to place any article of equipment in, or remove it from any one of the following groups:

(1) Adopted types; standard, substitute standard and limited standard.

(2) Service test types (where the type is applicable to the needs of more than one arm or service).

(3) Limited procurement types.

(4) Obsolete types.

The Chief of the Air Corps, with the concurrence of the interested arm or service may make changes in component parts of articles of equipment and approve them as standard, subsitute standard or limited standard provided the military characteristics of the article as approved by the Secretary of War are not appreciably changed thereby.

d. The Status of Equipment Book is published and distributed by the Materiel Division. Copies are ordinarily issued to Base Supply and Engineer Officers. The books are kept up-to-date by the issue of new sheets when changes in the status of equipment are made. When new sheets are received by the holder of a book, the old sheet which has been thereby replaced should be removed and destroyed.

16. Air Corps Standards Book--a. (1) The Air Corps Standards Book is distributed to Air Corps activities for information and guidance in connection with the classification, identification, and inspection of property.

(2) It is not a catalog. Only such parts as are necessary for the maintenance of existing aircraft are ordinarily carried in Air Corps stock, therefore, use the catalog published under their respective property classification when ordering supplies.

b. (1) This book is a tabulation of such parts as the Air Corps has selected as standard for aircraft construction.

(2) The parts indicated therein are not all carried in Air Corps stock, but have been included to meet possible future demands in development of aircraft and aircraft equipment. All persons preparing designs for the use of the Army Air Corps are required to use such standard articles as are listed in this book wherever it is practical to do so. Compliance with this requirement is necessary in order to properly service equipment in the field at the least possible expense.

(3) Whenever it is impossible to properly complete a structure without the use of a standard bolt, screw, etc. of exceptional size or length not listed in this book such part is considered a part of the article in which it was first used and given a major number the same as any other part of the mechanism. Such a part is not considered a standard utility until such time as its usage in various mechanisms demands that a stock be carried for general

use.

c. (1) The large number in the lower right hand corner of each sheet (Figures 10,11,&12) serves as a page number for arranging the book numerically and also as the major drawing and part number. These sheets are distributed separately as drawings when necessary as there are no separate drawings of each part.

(2) The number in the tabulation listed as "dash numbers" in conjunction with the page number serves to designate each particular part, so that in ordering parts, or on drawings, it is necessary to give the complete number as AN435-6-6 for a 3/16 dia. by 3/8 long round head iron rivet.

(3) The prefix AN on some of the parts, indicate parts which have been standardized by both the Army and Navy to be used interchangeably by either.

(4) The numbers in this book are coded to a certain extent. The code is simple and the key to each sheet is given thereon. This serves to aid stock keepers, drawing checkers and others using the standards constantly and also allows for expansion and contraction of the tabulations without creating a hodge-podge of the numbering system.

17. Drafting Room Manual--a. Purpose and Scope. The drafting room manual contains detailed instructions relative to the preparation of standard Air Corps drawings. It is intended for the use of activities charged with the preparation of drawings used in connection with the procurement, production and repair of equipment and material. Any activity which maintains a drafting room should have a copy of this manual.

b. Preparation. It is prepared in loose leaf form by the Engineering Section of the Materiel Division. When changes of any part of this manual are made, a new sheet including the changes is issued to all holders of a copy of the manual; thus, each manual is kept up-to-date.

c. Description. It contains briefly the following information:

(1) Drawing sizes, forms and scales.

(2) Established practice for notes and dimensions.

(3) Manufacturing process and material notes.

(4) Standardized design for machined elements.

(5) Tolerances and limits for machined elements.

(6) Threads and thread tolerances.

(7) Material sizes and dimensions.

(8) References to protective coatings and finishes.

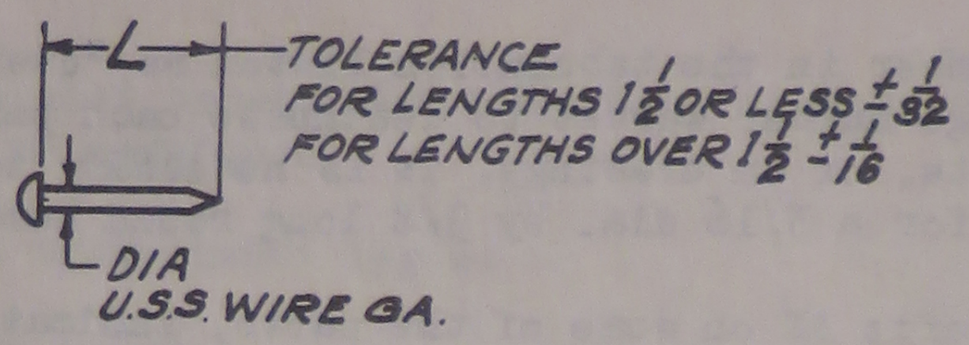

L	DASH NOS. & DIAMETER					
	#20(.035) ±.001	#18(.047) ±.002	#16(.062) ±.002	#15(.072) ±.002	#14(.080) ±.002	#13(.091) ±.003
1/4	20-2	18-2	16-2	15-2		
3/8	20-3	18-3	16-3	15-3	14-3	13-3
1/2	20-4	18-4	16-4	15-4	14-4	13-4
5/8		18-5	16-5	15-5	14-5	13-5
3/4		18-6	16-6	15-6	14-6	13-6
7/8		18-7	16-7	15-7	14-7	13-7
1		18-8	16-8	15-8	14-8	13-8
1 1/4					14-10	13-10
1 1/2					14-12	13-12
1 3/4						13-14
2						13-16

CAN BE USED AS RIVET AND BRAZING PINS

CODE - AN302-20-2 = PIN #20 GAUGE X 2/8 LONG

COMMERCIAL STANDARD
MATERIAL - BRASS
MANUFACTURING SPEC. 29-63

REVISED 6-24-29	APPROVED	AIR CORPS STOCK CLASSIFICATION 29	ARMY & NAVY STD.
	3-22-26	PIN - ESCUTCHEON	AN302
		IN ORDERING GIVE PART NO., NAME, DIA. & LENGTH	

Fig. 10. Air Corps Standards Book Sheet (AN302)

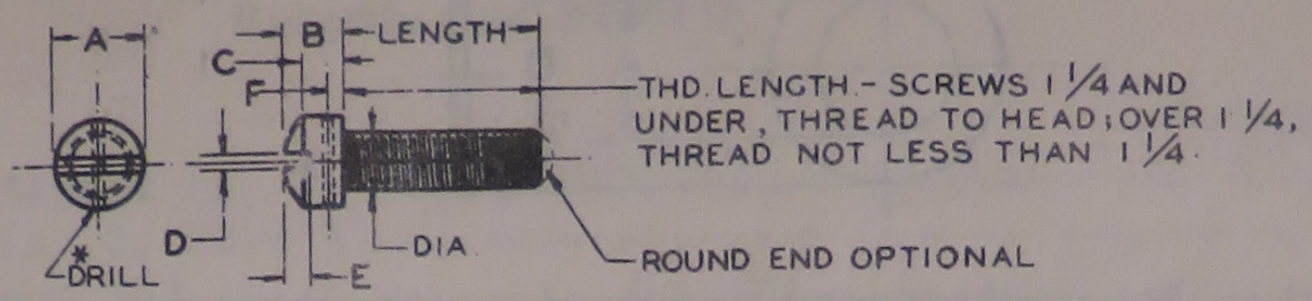

SIZE	NOM. DIA.	BASIC P. DIA.	A	B	C	D	E	F	DRILL
0	.060	.0519 +.0000 -.0017	.096 .083	.058 .041	.038 .029	.031 .020	.027 .011		
1	.073	.0640 +.0000 -.0018	.118 .103	.071 .052	.046 .037	.033 .022	.031 .016		
2	.086	.0759 +.0000 -.0019	.140 .124	.083 .063	.055 .045	.036 .024	.037 .021		
3	.099	.0874 +.0000 -.0020	.161 .145	.095 .073	.063 .052	.038 .026	.043 .026		
4	.112	.0985 +.0000 -.0022	.183 .166	.107 .084	.072 .060	.040 .028	.048 .031		
5	.125	.1102 +.0000 -.0023	.205 .187	.120 .095	.081 .068	.043 .031	.054 .036		
6	.138	.1218 +.0000 -.0024	.226 .208	.132 .105	.089 .076	.045 .033	.060 .041		
8	.164	.1460 +.0000 -.0025	.270 .250	.156 .126	.106 .091	.050 .037	.071 .050	3/64	#56(.046)
10	.190	.1697 +.0000 -.0027	.313 .292	.180 .148	.123 .107	.055 .041	.083 .060	3/64	#56(.046)
12	.216	.1928 +.0000 -.0031	.357 .334	.205 .169	.141 .123	.059 .045	.094 .070	3/64	#56(.046)
1/4	.250	.2268 +.0000 -.0031	.414 .389	.237 .197	.163 .143	.066 .051	.109 .083	1/16	#56(.046)
5/16	.3125	.2854 +.0000 -.0033	.519 .490	.297 .249	.205 .181	.077 .061	.137 .106	1/16	#50(.070)
3/8	.375	.3479 +.0000 -.0033	.622 .590	.355 .300	.246 .218	.088 .072	.164 .129	5/64	#50(.070)

Inactive for design purposes.

DASH NUMBERS FOR PLAIN STEEL SCREWS - FOR DRILLED HEADS & BRASS SEE BELOW

LGTH.	#0-80	#1-72	#2-64	#3-56	#4-48	#5-44	#6-40	#8-36	#10-32	#12-28	1/4-28	5/16-24	3/8-24
1/8	0-2	1-2											
3/16	0-3	1-3	2-3	3-3	4-3	5-3							
1/4	0-4	1-4	2-4	3-4	4-4	5-4	6-4	8-4	10-4				
5/16	0-5	1-5	2-5	3-5	4-5	5-5	6-5	8-5	10-5	12-5	416-5		
3/8	0-6	1-6	2-6	3-6	4-6	5-6	6-6	8-6	10-6	12-6	416-6		
7/16	0-7	1-7	2-7	3-7	4-7	5-7	6-7	8-7	10-7	12-7	416-7		
1/2	0-8	1-8	2-8	3-8	4-8	5-8	6-8	8-8	10-8	12-8	416-8	516-8	616-8
5/8	0-10	1-10	2-10	3-10	4-10	5-10	6-10	8-10	10-10	12-10	416-10	516-10	616-10
3/4	0-12	1-12	2-12	3-12	4-12	5-12	6-12	8-12	10-12	12-12	416-12	516-12	616-12
7/8	0-14	1-14	2-14	3-14	4-14	5-14	6-14	8-14	10-14	12-14	416-14	516-14	616-14
1	0-16	1-16	2-16	3-16	4-16	5-16	6-16	8-16	10-16	12-16	416-16	516-16	616-16
1 1/8					4-18	5-18	6-18	8-18	10-18	12-18	416-18	516-18	616-18
1 1/4					4-20	5-20	6-20	8-20	10-20	12-20	416-20	516-20	616-20
1 3/8					4-22	5-22	6-22	8-22	10-22	12-22	416-22	516-22	616-22
1 1/2					4-24	5-24	6-24	8-24	10-24	12-24	416-24	516-24	616-24
1 3/4					4-28	5-28	6-28	8-28	10-28	12-28	416-28	516-28	616-28
2					4-32	5-32	6-32	8-32	10-32	12-32	416-32	516-32	616-32
2 1/2									10-40	12-40	416-40	516-40	616-40
3									10-48	12-48	416-48	516-48	616-48

* ONLY WHEN SPECIFIED IN NAME & NUMBER

XAMPLE OF PART NUMBER - 501-6-8 - PLAIN STEEL
501A6-8 - DRILLED STEEL
501B6-8 - PLAIN BRASS
501AB6-8 - DRILLED BRASS

MATERIAL - STEEL SAE-1120 OR BETTER, BRASS SPEC. QQ-B-611
FINISH - CADMIUM PLATE SPEC. 98-20006 STEEL SCREWS ONLY
PACKING SPEC. 40560
MANUFACTURING SPEC. FF-S-91

REMOVE SHARP EDGES FROM LOCK WIRE HOLES.
THREADS ARE NATL. SCREW THREAD COM. FREE FIT, CLASS 2, SYMBOL NF-2.

REVISED 5-20-33, 9-21-34, 6-28-35, 3-23-38

APPROVED	AIR CORPS STOCK CLASSIFICATION 29	
5-27-30	SCREW - FILL. HEAD, DRILLED OR PLAIN HEAD (FINE THREAD)	501

Fig. 11. Air Corps Standards Book Sheet No. 501.

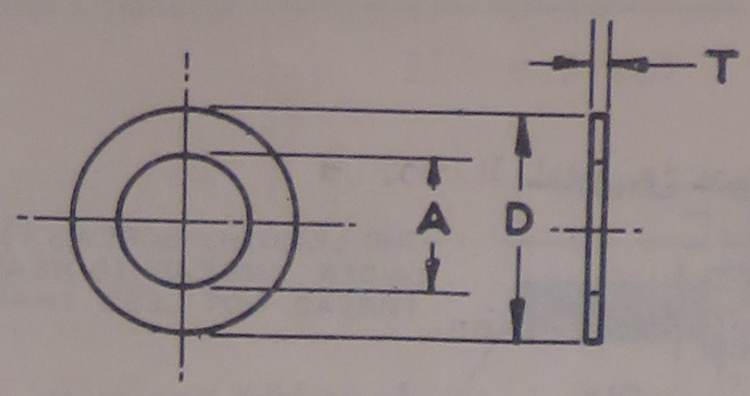

DASH NUMBERS								BOLT SIZE	A	D	T
ALUM. ALLOY	STEEL-COR.RES. *LIGHT SERIES	STEEL-COR.RES. REGULAR SERIES	BRASS	ALUMINUM *LIGHT SERIES	ALUMINUM REGULAR SERIES	+STEEL-CARBON *LIGHT SERIES	+STEEL-CARBON REGULAR SERIES				
				A3L							
D3		C3	B3		A3		3	#3	7/64	1/4	1/64, 1/32
				A4L							
D4		C4	B4		A4		4	#4	1/8	5/16	1/64, 1/32
				A6L							
D6		C6	B6		A6		6	#6	9/64	3/8	1/64, 1/32
				A8L							
D8		C8	B8		A8		8	#8	11/16	3/8	1/64, 1/32
				A10L							
	C10L					10L					1/64,
D10		C10	B10		A10		10	#10	13/64	7/16	1/32, 1/16
				A416L							
	C416L					416L					1/64,
D416		C416	B416		A416		416	1/4	17/64	1/2	1/32, 1/16
				A516L							
	C516L					516L					1/64,
D516		C516	B516		A516		516	5/16	21/64	9/16	1/32, 1/16
				A616L							
D616		C616	B616		A616		616	3/8	25/64	5/8	1/64, 1/16
				A716L							
D716		C716	B716		A716		716	7/16	29/64	3/4	1/64, 1/16
				A816L							
D816		C816	B816		A816		816	1/2	33/64	7/8	1/64, 1/16
				A916L							
D916		C916	B916		A916		916	9/16	37/64	1 1/16	1/64, 1/16
				A1016L							
D1016		C1016	B1016		A1016		1016	5/8	41/64	1 3/16	1/64, 1/16
				A1216L							
D1216		C1216	B1216		A1216		1216	3/4	49/64	1 5/16	1/64, 3/32
				A1416L							
D1416		C1416	B1416		A1416		1416	7/8	57/64	1 1/2	1/64, 3/32
				A1616L							
D1616		C1616	B1616		A1616		1616	1	1 1/64	1 3/4	1/64, 3/32

+ HARD FINISHED SAE-1010 STEEL OPTIONAL

MUST BE FLAT AND FREE FROM BURRS

MATERIAL:	FINISH:
STEEL - AN-QQ-S-651 OR SAE-1010 STEEL	CADMIUM PLATE SPEC. AN-QQ-P-421
ALUMINUM - 57-151-1	ANODIZE SPEC. 98-20005
BRASS - QQ-B-611	NONE
COR. RES. STEEL - 57-136-9	NONE
ALUM. ALLOY - QQ-A-353	ANODIZE SPEC. 98-20005

EXAMPLE OF PART NO. - AN960B10

PACKING SPEC. 40560
LIMITS ON DIMENSIONS ±.010 UNLESS OTHERWISE SPECIFIED

B/M

APPROVED	AIR CORPS STOCK CLASSIFICATION 04A	ARMY & NAVY STD.
3-22-26	WASHER - PLAIN	AN960

REVISED * 12-11-39,

Fig. 12. Air Corps Standards Book Sheet (AN960).

Section III

Records And Reports

	Paragraphs
Airplane Flight Report (A. C. Form 1 and 1A)	18
Flight Envelope (A. C. Form 9)	19
Invoice (A. C. Form 15)	20
Damage to Property Certificate (A. C. Form 17)	21
Clearance for Aircraft (A. C. Form 23)	22
Forced Landing Report	23
Maintenance Inspection Record for Airplanes (A. C. Forms 41, 41A, 41B, 41C)	24
Armament Inspection Record (A. C. Form 43)	25
Radio Inspection And Maintenance Record (A. C. Form 44)	26
Aerial Camera Inspection Record (A. C. Form 45)	27
Parachute Record (A. C. Form 46)	28
Work Order (A. C. Form 48)	29
Parts Tags (A. C. Forms 49, 50, 51, 83 and 83A)	30
Unsatisfactory Report (A. C. Form 54)	31
Technical Order Compliance Report (A. C. Form 55)	32
Parachute Inspection And Drop Test Card (A. C. Form 58)	33
Technical Instruction Compliance Record (A. C. Forms 60A & 60B)	34
Propeller Historical Record (A. C. Form 61)	35
Stores Charge (A. C. Form 81)	36
Stores Credit (A. C. Form 82)	37
Memorandum Receipt (A. C. Form 99)	38
Instruction Slip (A. C. Form 241)	39
Stores Exchange (A. C. Form 249)	40
Inspection And Inventory Report (IGD Form 1)	41
Report of Survey (AGO Form 15)	42

18. Airplane Flight Report (A. C. Form 1 And 1A)--a. General--The Airplane Flight Reports are used for recording the flight data and maintenance status of all military airplanes. The Form 1 is shown in figure 13, while Form 1A is illustrated in figure 14.

(1) Operations Flight Report (Form 1)--This form provides data pertinent to the flight and is prepared in duplicate by the pilot by means of a one time carbon sheet. This carbon sheet is glued in position and need not be inserted. After flights, the accomplished forms are sent directly to the Operations Office where they are examined and audited for accuracy and legibility.

(a) The original copies must be sent daily to the Assistant Chief, Materiel Division, Wright Field, where the flight data referring to airplanes and engines is recorded on punch-cards. They are then forwarded to the Office of the Chief of the Air Corps where data referring to the individual is recorded on punch-cards.

(b) The duplicate copies of the form must be retained by the Operations Office for local use in connection with the individual's current experience, the organization's progress towards accomplishment of its

current training program, the preparation of flight certificates, etc.

(2) Engineering Flight Report (Form 1A)--This form provides a record of engineering data and is prepared in original only. After flights the total flight time is transcribed from Form 1 to Form 1A by the mechanic. The Engineering Flight Report is then sent directly to the Engineering Office.

b. Responsibility--Responsibility for the accomplishment and handling of the form is distributed as follows:

(1) Commanding Officers are responsible for local coordination, provision of facilities and all arrangements necessary to insure the prompt and proper accomplishment of the form.

(2) Operations Officers are responsible for:

(a) Instructing pilots and other flying personnel, in the matter of making proper entries on the reports.

(b) Arranging a routing procedure to insure prompt daily delivery of the accomplished forms.

(c) Organizing a routine office procedure to insure prompt and effective daily examination and audit of the accomplished forms.

(d) Instructing clerical personnel in the details of the examination and audit procedure and supervising that work to insure that the forms are prepared correctly, and are legible and accurate.

(e) Establishing and supervising a local procedure and schedule to insure that accomplished forms, after having been examined and audited are mailed on scheduled time each day, to the Assistant Chief, Materiel Division. The routine should be arranged so that the forms are mailed on the day following the day of the flight.

(f) Preparation of a Daily Transmittal Sheet and Change Report to accompany the forms mailed to the Assistant Chief, Materiel Division.

(g) Establishing and supervising a localprocedure to cover the use of the retained duplicate forms for maintaining local records.

(3) Engineering Officers are responsible for:

(a) Instructing Engineering Department personnel in their duties in connection with the use and routing of the Flight Reports.

(b) Arranging for daily scheduled deliveries of the accomplished Forms 1 to the proper Operations Office.

(c) Supervising the work of mechanics and others to insure proper entries of the Flight Reports and prompt and proper distribution and routing.

DATE

STATION

CREW CHIEF OR AERIAL ENGINEER

AIRPLANE ORG. DATA

WING | CORPS AREA OR DEPT.

GROUP NO. AND TYPE

ORG. NO. AND TYPE

AIRPLANE DATA

BRANCH

AIRPLANE MODEL

AIRPLANE SERIAL NO.

ENGINE DATA

ENGINE MODEL

(1) ENGINE SERIAL NO. | (2) ENGINE SERIAL NO.

(3) ENGINE SERIAL NO. | (4) ENGINE SERIAL NO.

PERSONNEL		— PRINT PLAINLY — NAME — RANK — ORGANIZATION	USE AS DIRECTED LOCALLY	ALWAYS ENTER DUTY SYMBOLS. WHEN APPLICABLE, ENTER N - NIGHT OR I - INSTRUMENT. ENTER TIME FLOWN THEREUNDER								FLIGHT DATA	
CLASS	SERIAL NO.			DUTY	N OR I	DUTY	N OR I	DUTY	N OR I	DUTY	N OR I	TERMINALS AND MISSION	TIME
1	2	3	4	5		6		7		8		9	10
					:		:		:		:	FROM:	:
					:		:		:		:	TO:	:
					:		:		:		:	MISSION: NO. OF LANDINGS	:
					:		:		:		:	FROM:	:
					:		:		:		:	TO:	:
					:		:		:		:	MISSION: NO. OF LANDINGS	:
					:		:		:		:	FROM:	:
					:		:		:		:	TO:	:
					:		:		:		:	MISSION: NO. OF LANDINGS	:
					:		:		:		:	FROM:	:
					:		:		:		:	TO:	:
					:		:		:		:	MISSION: NO. OF LANDINGS	:
					:		:		:		:	FROM:	:
					:		:		:		:	TO:	:
					:		:		:		:	MISSION: NO. OF LANDINGS	:
					:		:		:		:	FROM:	:
					:		:		:		:	TO:	:
					:		:		:		:	MISSION: NO. OF LANDINGS	:

WAR DEPARTMENT
AIR CORPS - FORM NO. 1
TENTATIVE - SEPT. 1940

FLIGHT REPORT - OPERATIONS

CHECKED: LEGIBLE AND CORRECT ☐ OPER. CLERK

TRANSCRIBED: TOTAL FLIGHT TIME ENTERED ON FORM 1A ☐ CREW CHIEF

TOTAL FLIGHT TIME :

REDIFORM—PATD.—AMERICAN SALES BOOK CO., INC., NIAGARA FALLS, N.Y.

Fig. 13. Operations Flight Report, Form 1.

AIRPLANE MODEL _____ A. C. NO. _____ ORGANIZATION _____ STATION _____ DATE _____

INSPECTION STATUS

	DATE OF OR HOURS DUE	INSPECTED TODAY BY	INSPECTED TODAY STATION
PREFLIGHT			
DAILY			
25 HOURS			
50 HOURS			
100 HOURS			

AIRPLANE AND ENGINE TIME RECORD
(ENTER IN HOURS AND MINUTES)

ENGINE	NO. 1	NO. 2	NO. 3	NO. 4
HOURS TO DATE				
HOURS TODAY				
TOTAL				
OIL CHANGE DUE				
CUNO. CLEANING DUE				

AIRPLANE	
HOURS TO DATE	
HOURS TODAY	
TOTAL	

SERVICING AT STATION OF TAKE-OFF
(CHECK IMMEDIATELY BEFORE TAKE-OFF)

SERVICE	FUEL (GALLONS) SERVICED	FUEL (GALLONS) IN TANKS	OIL (QUARTS) NO. 1 SERVICED	NO. 1 IN TANKS	NO. 2 SERVICED	NO. 2 IN TANKS	NO. 3 SERVICED	NO. 3 IN TANKS	NO. 4 SERVICED	NO. 4 IN TANKS	RADIATOR CHECKED
1ST											
2ND											
3RD											
4TH											
5TH											

STATUS TODAY: 1. 2.

EXPLANATION: _____

EXCEPTIONAL RELEASE

WHEN THE "STATUS TODAY" IS INDICATED BY A RED SYMBOL AND AN "EXCEPTIONAL RELEASE" HAS NOT BEEN GRANTED BY AN AUTHORIZED ENGINEERING OFFICER, THE PILOT OF THE AIRPLANE WILL SIGN THIS RELEASE BEFORE FLIGHT.

RELEASED FOR FLIGHT { 1 _____ 3 _____ 2 _____ 4 _____

INSPECTION OF AUXILIARY EQUIPMENT

EQUIPMENT	SYMBOL	INSPECTED BY	STATION
BOMBARDMENT			
GUNNERY			
NAVIGATION			
RADIO			
OXYGEN			
PHOTOGRAPHIC			
CHEMICAL			

INSTRUCTIONS FOR PILOTS AND MECHANICS

PILOTS: EACH PILOT WILL PRINT NAME AND RANK BELOW, AND INDICATE "OK" OR, IF ANY DEFECT OR MALFUNCTIONING OCCURRED, EXPLAIN THE TROUBLE.

MECHANICS: TRANSPOSE "TOTAL FLIGHT TIME" FROM FORM 1 TO ENTRIES "HOURS TODAY" UNDER "AIRPLANE AND ENGINE TIME RECORD" ABOVE. PRECEDE EACH REMARK WITH THE NAME OF THE STATION. EXPLAIN ANY RED SYMBOL ENTERED UNDER "INSPECTION OF AUXILIARY EQUIPMENT". ENTER ANY MAINTENANCE WORK DONE WHILE AIRPLANE IS ON THE FLYING LINE OR AWAY FROM ITS HOME STATION. SIGN EACH REMARK MADE.

WAR DEPARTMENT
AIR CORPS
FORM NO. 1 A
TENTATIVE - SEPT. 1940

FLIGHT REPORT - ENGINEERING

REDIFORM—PATD.—AMERICAN SALES BOOK CO., INC., NIAGARA FALLS, N.Y.

Fig. 14. Engineering Flight Report, Form 1A.

c. Use and description of the flight reports--Forms 1 and 1A must be used by all Regular Army, Organized Reserve, and National Guard aviation units, and Air Corps Civil Flying Schools, to report flight and engineering data pertaining to each airplane operated and maintained by such units. They must also be used by all military personnel on flying status who are assigned to duty requiring flights in non-Air Corps airplanes, to report each official duty flight in such airplanes.

(1) Forms 1 and 1A are padded in sets as follows:

(a) Form 1 - An original and duplicate, with a one-time pencil carbon paper glued in position between them.

(b) Form 1A - Original only, following each set of Forms 1.

(c) A front cover which is used as a carbon-stop to be inserted over the carbon sheet when erasing on the original. On the inside of the front cover are printed the various codes used in making entries on Form 1.

(d) A rear cover sheet which extends from the right and is used as a carbon-stop to be kept in position beneath the current set of Forms 1 so as to prevent carbon impressions on forms beneath the current set.

(e) A rear strawboard backing sheet to give rigidity to the pad of forms.

(2) A pad of Flight Reports, with a sharpened black lead pencil attached by a cord, must be kept in each airplane in the holder provided. Each of these pads must have inserted in it the operating instructions and fuel consumption data pertaining to the airplane.

(3) The functions of the Flight Reports are:

(a) Operations Flight Report (Form 1)--The original copy of the form provides the Office of the Chief of the Air Corps and the Materiel Division with an original source document used in compiling Individual Flight Records and various statistics, such as flying time by stations, organizations, missions, duty, personnel classes, airplanes, engines, etc. The duplicate copy provides Operations Officers with a report of each flight, for use in maintaining local records such as required for preparation of flight certificates, maintenance of training progress records, etc.

(b) Engineering Flight Report (Form 1A)--This form provides the pilot with pertinent data relative to the servicing, inspection and maintenance status of the airplane before take-off, It also serves to provide the mechanic with a convenient means of recording data required for transcription to Form 41, such as flying time, servicing, malfunctioning during flight, inspection and maintenance work performed.

d. Duties of the mechanic with respect to Forms 1 and 1A--The crew chief or aerial engineer must perform the following duties with respect to the forms:

(1) See that a pad of Flight Reports, with sharpened pencil attached, is kept in the holder provided in the airplane.

(2) Transcribe pertinent entries from Form 1 to Form 1A, and from Form 1A to Form 41.

(3) Bring the pilot's attention to entries on Form 1A, particularly those indicating mechanical defects or delinquent inspections, before take-off.

(4) Prepare a new set of Flight Reports in the following instances:

(a) After the last flight of each day, so that new forms are ready for the first flight of the succeeding day. However, such new forms must not be prepared until after all necessary inspections, maintenance, and servicing work have been accomplished as it is important that Form 1A show the correct status of the airplane.

(b) In the event that the oil is changed after the first flight of the day, so that the entry on Form 1A, "Oil Change Due" shows the correct engine hours.

(c) In the event that the 25-hour, 50-hour, or 100-hour inspection is completed during the day, so that entries on Form 1A indicate the new inspection status and the correct airplane hours at which such inspections are next due.

(5) Record the preflight inspection, made as prescribed by technical instructions, prior to the first flight each day.

(6) Check the quantities of fuel and oil in the tanks before the first flight each day, and after each servicing, compare this data with Form 1A to see that the correct quantities are shown in the columns headed "In Tanks".

(7) Remove accomplished Flight Reports from the pad, prepare new forms in readiness for the next flight, and forward accomplished Forms 1 to the Operations Office.

(8) Make the following entries on Form 1:

(a) All entries at the head of the form.

(b) Before removing accomplished forms from the pad, add the time of each flight and enter the sum in the space head "Total Flight Time".

(c) Transcribe the total flight time to the next blank Form 1A and initial Form 1 in the space headed "Transcribed: Total Flight Time entered on Form 1A".

(9) Make the following entries on Form 1A:

(a) All entries at the head of the Form.

(b) All entries under the heading "Airplane and Engine Time Record" which may be explained as follows:

1. For engines the "Hours to Date" are the hours since last overhaul.

2. The engine time entry, "Hours Today" is the Total Flight Time of that day as transcribed from the Form 1. This entry should always be made before removing the Forms 1 and 1A from the pad.

3. "Total" engine time is the sum of the entries, "Hours to Date" and "Hours Today". Before removing accomplished Flight Reports from the pad, the "Total" engine hours should be transcribed to the next blank Form 1A, as entry "Hours to Date", in preparation for the next flight.

4. The entries "Oil Change Due" and "Cuno Cleaning Due", are the engine hours since overhaul at which these services are next due.

5. For airplanes the "Hours to Date" are transcribed, when preparing a new Form 1A, by entering the total airplane hours from the previously accomplished Form 1A.

6. The airplane "Hours Today" are transcribed from the entry of "Total Flight Time" on Form 1.

7. Before removing Flight Reports from the pad, the airplane "Hours Today" must be added to the "Hours to Date" and the sum entered on the line headed "Total". This entry is then transcribed to the next blank Form 1A on the line headed "Hours to Date".

8. All transcription entries must be made before removing accomplished Flight Reports from the pad.

(c) The following entries under the heading "Inspection Status":

1. In the column headed "Date of, or Hours Due", enter the date of the "Preflight" inspection and transcribe this entry to Form 41. If not made for the current day, enter a red dash in this space. The date of the last "Daily" inspection may be entered initially on Form 1A or Form 41. In either event the date of the last "Daily" inspection is entered on the current Form 1A, and if the "Daily" inspection is not made, a red dash symbol must be entered in this space. On the lines headed "25-hour", "50-hours", and "100-hours" are entered the airplane hours since depot inspection and repair at which those inspections are next due. Two blank lines are provided for the entry of airplane hours at which other inspections, such as a 200-hour or 300-hour inspection are due. The hours at which such extended period inspections are due must be entered when directed by local authority and are provided for use primarily in cases when such an inspection is imminent and will probably be due during the next flight.

2. When an inspection is made on the current date of the Form 1A and is not entered initially on Form 41 (as when the airplane is away from the hangar or home station) accomplish the entries "By" and "Station" in the columns headed "Inspected Today".

(d) Under the headings "Status Today" and "Explanation", enter the appropriate symbol to indicate the status of the airplane. Two spaces are provided for use of the status changes during the day. Explain the condition if the status is indicated by a red symbol.

(e) Under the heading "Exceptional Release" enter the authority for release if the status is indicated by a red symbol and the airplane has been released for flight.

(f) Under the heading "Servicing at Station of Take-off":

1. Enter each servicing of fuel and oil in columns headed "Serviced".

2. Prior to the first flight of the day, and again after each servicing, check the fuel and oil and enter the quantities in the spaces headed "In Tanks".

3. Initial each entry in the columns headed "Serviced" and "In Tanks". This must be done by the individual who serviced the airplane or who checked the quantities in the tanks.

4. For liquid-cooled engines at the time of each servicing, check the radiator and enter a check mark in column "Radiator Checked".

(g) Under the heading "Instructions for Pilots and Mechanics", space is provided for entries as per instructions printed on the form and for remarks and explanations which may be of value to the pilot or maintenance personnel.

e. Duties of Pilots with Respect to Forms 1 and 1A.--It is the pilot's duty to know the condition of the airplane as shown by Form 1A. If the airplane, or any item of auxiliary equipment, is shown as "OK for Flight", and before take-off or during flight the pilot discovers defects which should have been indicated on Form 1A, he must report this fact directly to the Engineering Officer.

(1) Before taking off, pilots must perform the following duties:

(a) Inspect Form 1A and specifically note:

1. The "Inspection Status" and "Status Today". When a red symbol is shown, the pilot must determine if the airplane is safe for the contemplated flight and if considered safe must sign the "Exceptional Release". An Exceptional Release, signed on Form 1A by a pilot, is a valid release for flight by the signer only.

2. The engine hours at which oil change is due, and the engine hours at which Cuno strainer cleaning is due. He must compare this data with the entries of the engine "Hours to Date".

3. The entries under the heading "Servicing at Station of

Take-off". He must note whether the airplane has been flown since the "In Tanks" entries were made and that the fuel and oil in the tanks is sufficient for the contemplated flight.

(b) Make the following entries on Form 1.

1. Enter the Personnel Classification Code number for each occupant in Column 1. This code appears on the inside front cover of the pad and is further explained later in the text.

2. Enter in Column 2 the Army Serial Number of each occupant holding an aeronautical rating for each non-rated officer on flying status, and for each student at a flying school. It is important that this entry be correct and legible as it is used as the key in compiling mechanical tabulations of each individual's flying time. Serial numbers of other occupants are not required.

3. Print in Column 3, the surname first, then the given name or initials, followed by the rank, of each occupant, For each occupant who is flying as a casual, that is, assigned or attached for flying to an organization other than that to which the airplane belongs (as shown in the heading of the form) enter his organization number and type, as for example "17th Pursuit Squadron". If such casual is from another station, enter also the name of the station to which he is assigned or attached for flying. For each occupant who is not a member of an Air Corps component, enter his Arm or Service, using standard Army abbreviations, such as SC - Signal Corps, QMC - Quartermaster Corps, FA - Field Artillery, etc.

4. Make entries in Column 4 as directed by local authority. Commanding Officers may assign code numbers to each subject under the current training guide to facilitate maintaining Operations Office records of the status and progress of training.

5. Columns 5 to 8 are designed to show the flying time of each individual on each duty, and when applicable, the flying time on instruments or at night. For each occupant, enter under the heading "Duty" in Column 5, the duty symbol indicating the crew position at take-off. Further entries in Columns 5 to 8 are made after landing and are described under a separate heading.

6. In the spaces "From" and "To" in Column 9, enter the places of take-off and landing. The word "Local" may be used for a flight during which no stop was made away from the station of departure. In the space marked "Mission" enter the proper mission symbol, using the code printed on the inside front cover of the pad.

7. Opposite the entry "From" in Column 10, enter the time of take-off.

(2) After landing, pilots must complete the columnar entries on Form 1 as follows:

(a) Columns 5 to 8, inclusive.

1. If, during the flight, or series of flights, any occupant changed his duty position, enter the new duty symbol in the next column (6, 7 or 8 as the case may be).

2. For that portion of the flight or series of flights made at night or on instruments, enter (under heading "N or I") the pertinent symbol, N for Night and I for Instrument. The symbols N or I must be entered only in combination with the duty symbol indicating the duty position of the occupant while flying at night or on instruments.

3. Under each duty symbol, and when applicable under each combination of a duty symbol with an N or I symbol, enter the flying time in hours and minutes.

4. Even though no night or instrument flying was performed, the columns 5 to 8 must be used to enter the duty symbol for each occupant and for each change of duty, and to enter the flying time under each duty symbol.

5. The entries of symbols N or I must be made only for those individuals who are required to comply with prescribed minimum flying requirements.

6. In making the pertinent entries in columns 5 to 8, inclusive, the pilot must account for the flying time of each individual. The sum of the entries in columns 5 to 8 must equal the elapsed time of the flight, or series of flights. If, during the flight or series of flights by the same occupants, a duty change involved the pilot or co-pilot, the sum of the time for the various individuals under symbol "P", and when applicable, the sum of the time entered under symbol "CP", must equal the elapsed time of the flight, or series of flights. Exceptions to this case will exist when, under the provisions of A. C. Circular 60-19, concurrent pilot time is entered for the same period in the same airplane. In this event, the sum of the time entered on Form 1 under Duty Symbol "P" will not equal the elapsed time of the flight, but will exceed the flight time by the amount of such concurrent pilot time.

(b) Column 9.

1. If a landing was not made at the contemplated destination entered before take-off, correct the entry.

2. Enter the number of landings.

(c) Column 10.

1. Opposite the entry "To", enter the time of landing.

2. On the line beneath, enter the elapsed time of the flight in hours and minutes. The elapsed time must be shown for each terminal flight, i.e., for each flight where the terminals and the take-off and landing time are shown. Where a series of terminal flights are made by the same crew, the pilot must add the elapsed time of the various terminal

flights, draw a line under the last entry of elapsed time (the last flight of that crew) and enter the sum of the elapsed time of all flights by that crew.

3. Enter the time of the flight to the nearest five minutes, excepting at Civil Flying Schools, where the time of instruction flights participated in by students and instructors must be entered to the nearest minute.

(3) After landing, pilots must make entries on Form 1A as follows:

(a) In the space for remarks the pilot must enter his name and the letters "OK" to indicate satisfactory functioning of the airplane and equipment. If any defect or malfunctioning was experienced the pilot must explain the trouble.

(4) Pilots must not remove Forms 1 from the pad, except when the airplane is absent from its home station. In this event accomplished Forms 1 may be removed from the pad and mailed to the home station at any time, provided that the accomplished forms must always be mailed to the home station so as to arrive not later than the last day of the month. Forms 1 accomplished subsequently for that month must be retained in the pad until the pilot arrives at the home station.

(a) When it is necessary to remove accomplished Forms 1 from the pad the pilot must remove the carbon sheet and transcribe the entry "Total Flight Time" from the Form 1 to the next blank Form 1A in the spaces headed "Hours Today" for each engine and for the airplane. These entries are under the heading "Airplane and Engine Time Record" on Form 1A. He must also make and sign a notation on Form 1A which is substantially as follows:

"Form 1 mailed (date) to (station)."

(5) When a new pad is started while away from the home station, pilots may mail the pad of accomplished Flight Reports to the home station, provided the following entries are transcribed from the last accomplished Form 1A to the first Form 1A in the new pad:

(a) All entries at the head of the form.

(b) All pertinent entries as to "Inspection Status", "Airplane and Engine Time Record", "Status Today", "Exceptional Release", and "Inspection of Auxiliary Equipment". In this respect it is important that entries under "Airplane and Engine Time Record" be transcribed accurately as this record forms the basis for the cumulative time record on Form 41 and controls the periodic inspections.

(6) Air Corps representatives at contractors' plants must prepare Forms 1 and 1A for airplanes being procured by the Air Corps but must leave the accomplished Forms 1 and 1A in the pad which will be turned over to the ferry pilot for use enroute. Forms 1 for airplanes in the hands of Air Corps representatives at the contractors' plants and those in the hands of ferry pilots must be mailed to the station to which the airplane is being delivered.

All Forms 1 held by Air Corps representatives at contractors' plants for airplanes not yet assigned to a specific destination, should not be removed from the pad at the end of the month, but held with the pad and subsequently turned over to the ferry pilot.

(7) Personnel assigned or attached for flying to non-Air Corps activities and required to accomplish their flying in non-Air Corps airplanes, are personally responsible for preparing and submitting Forms 1. The personnel referred to are officers assigned to duty at such stations as the Naval War College (when flying Navy aircraft); foreign missions (when flying foreign aircraft); the Philippine Provisional Government; etc. For personnel assigned to a non-Air Corps activity, but attached for flying to an Air Corps activity, the Forms 1 must be handled by the Operations Office to which they are attached in the same manner as for personnel assigned to the organization. Forms 1A are not required in non-Air Corps airplanes. The phrases "Non-Air Corps Airplanes" and "Non-Air Corps Activities" as used above, do not apply to National Guard or Air Corps Reserve airplanes or activities. Preparation and submission of the Forms 1 for non-Air Corps airplanes must be made as follows:

(a) Prepare the form in duplicate for each flight.

(b) Accomplish pertinent entries at the head of the form. Airplane and engine serial numbers are not required.

(c) Accomplish all columnar entries in columns 1 to 10, inclusive, the same as for flight in Air Corps airplanes.

(d) Mail the original forms to the Assistant Chief, Materiel Division, Wright Field, Dayton, Ohio, daily as accomplished.

(e) Retain the duplicate forms until next assigned to an Air Corps activity and then turn them over to the Commanding Officer of the Air Corps activity to which assigned. These duplicates are for the information of the Commanding Officer and may be disposed of at his discretion.

f. Duties of Engineering Officers with respect to Forms 1 and 1A:-- Engineering Officers must require all mechanics under their supervision to comply strictly with the instructions previously outlined. When flights of aircraft are on extended missions, the flight engineering officer is responsible that required inspection and maintenance work is accomplished in accordance with technical instructions, and is properly recorded on Form 1A. When the status of the airplane is indicated by a red dash or red diagonal, Engineering Officers may release it for flight by signing the "Exceptional Release", on Form 1A. However, the preferred procedure is for the Engineering Officer to sign the "Exceptional Release" on Form 41.

(1) An Exceptional Release signed by an Engineering Officer is effective for the calendar day unless additional defects are detected subsequently.

(2) When a pilot reports a forced landing as the result of material

failure or malfunctioning, the Engineering Officer must investigate the cause thoroughly and add his comments to the report made by the pilot.

(3) Engineering Officers are responsible for the prompt daily delivery of accomplished Forms 1 to the proper organization Operations Officer. They must also instruct mechanics in the proper handling of Forms 1 and provide for and supervise the collection and delivery of the forms to the Operations Officer.

(a) The routine established by Engineering Officers should include a definite receptacle or file for receiving the Forms 1; precautions against loss; examination to see that total flight time has been transcribed to Form 1A; and a scheduled time for daily delivery to a designated individual in the Operations Office.

(4) Engineering Officers must file accomplished Forms 1A until they have been inspected by an Air Corps Technical Supervisor, after which they may be destroyed.

g. Duties of Operations Officers with respect to Forms 1 and 1A--Organization Operations Officers are responsible that all flying personnel assigned or attached to the organization are familiar with and comply with the system of maintaining the forms.

(1) Operations Officers must also supervise the control, examination and audit procedures and the collection and forwarding of accomplished Forms 1 for flights in airplanes operated under their control, as follows:

(a) Separate or detached squadrons, flights or detachments, including Air Corps Training Detachments at Civil Flying Schools.

(b) Group Operations Officers, for all flights in aircraft operated by the Group, except as provided under (a).

(c) Station or Base Operations Officers, for all flights in aircraft operated by the Station or Base, except as provided under (a) and (b).

(2) It is important that Operations Officers study the entire system and make all arrangements necessary to insure compliance with these instructions. The following essentials are emphasized:

(a) Instruct flying personnel to make the required entries on Forms 1 and 1A properly.

(b) Arrange for prompt scheduled delivery of accomplished Forms 1 from the Engineering to the Operations Office.

(c) Instruct Operations Office personnel in the examination and audit procedure outlined herein.

(d) Provide facilities for the examination and audit work, including written instructions to personnel and a serial number check list

of all personnel holding an aeronautical rating and all officers on flying status who are assigned or attached for flying.

(e) Arrange for auditing personnel to receive a daily report of personnel changes, that is, personnel holding an aeronautical rating and officers on flying status who have reported to or departed from the organization under change of station or change of organization orders, and personnel whose flying status has changed.

(f) Provide locally designed forms for use as a Transmittal Sheet and Change Report as later outlined in this text.

(g) Issue local instructions to cover the use of the retained duplicates of accomplished Forms 1.

h. Use of Flight Reports in the Inspection and Maintenance of Transient Aircraft--All entries on the Flight Reports and the preparation of new Flight Reports for transient aircraft must be made in the same manner as prescribed for assigned airplanes.

(1) Accomplished Flight Reports pertaining to transient airplanes must not be removed from the pad by local personnel, except when instructed by the pilot to mail such reports to the home station.

i. Use of Flight Reports in the Inspection of Auxiliary Equipment--Auxiliary equipment, as listed on Form 1A must be inspected by specialists which have been assigned by the officer responsible for the maintenance of such equipment.

(1) These specialists must not make entries on Form 41 but should initially record the accomplished inspections on Form 1A.

(2) When the accomplished Form 1A is removed from the pad, the mechanic in charge of the airplane must transcribe the inspection record to Form 41.

j. Control of the Flight Reports--Operation Officers must establish and supervise the control procedure, including the following essential checks to insure against loss or delay.

(1) A routine check to insure that accomplished Forms 1 are received for each flight cleared and terminated locally that day and for each flight cleared on a previous date and terminated locally that day.

(2) A routine check to insure that accomplished Forms 1 for extended flights cleared locally but terminated elsewhere are received when the airplane has returned. The procedure for flights extending over the end of the month has been covered in an earlier paragraph.

k. Examination and Audit of the Flight Reports--The original Forms 1 are source documents from which all flying data are recorded on punch-cards.

From the punch-cards, electric tabulating machines compile flight records for each individual and for each airplane and engine, as well as for many statistical purposes. It is therefore important that entries on Forms 1 be accomplished in accordance with these instructions, and are complete, correct, and legible. To obviate delays and unnecessary work incident to returning Forms 1 for correction, Operations Officers must establish and supervise examination and audit procedure essentially as follows:

(1) See that both the original and duplicate of each accomplished Form 1 are received and that the carbon paper has been removed.

(2) Keep the originals and duplicates together so that corrections may be made on both copies.

(3) See that all required entries have been made. Entries most likely to be omitted are:

(a) The individual's serial number.

(b) The individual's initials.

(c) The individual's organization, in the case of a casual.

(d) The individual's Arm or Service in the case of a Non-Air Corps officer on flying status.

(e) The initials of the crew chief in the block "Transcribed - Total Flight Time Entered on Form 1A". If the crew chief's initials are missing, the Engineering Officer must be notified at once in order to effect the missing entry of flying time on Form 1A.

(4) See that all entries are legible, giving particular attention to the legibility of figures. Where erasures and corrections have been made, see that the corrected entry is legible. Where legibility is in doubt, erase and re-enter or overmark clearly with a soft pencil. A blue pencil is preferable for this use.

(5) Check for accuracy with respect to the following entries:

(a) All data at the head of the form, giving particular attention to airplane and engine serial numbers and engine model symbols.

(b) Personnel class number in Column 1. Auditing personnel should be thoroughly familiar with the Personnel Class Code and its proper use as explained in a later paragraph.

(c) Personnel Serial Number, in Column 2. It is extremely important that each individual's serial number be correct and it is therefore necessary to check the serial number with the name on the list provided by the Operations Officer. Serial numbers should be entered only for personnel holding an aeronautical rating and for officers on flying status as Individual Flight Records are tabulated for such personnel only.

(6) Check the entries in columns 5 to 8, inclusive, as follows:

(a) The duty symbols must be consistent with the individual's rating and flying status.

(b) The symbols - N - "Night" - or - I - "Instrument" should be shown only for personnel who are required to perform night and instrument flying, under the provisions of A. C. Circular 50-12.

(7) Audit the entries in columns 5 to 8 inclusive, to see that they add to the elapsed time entered in column 10, as follows:

(a) Column 10 provides for entering data pertaining to five different terminal flights. The crew, as listed in column 3, may make from one to five terminal flights and the time of each occupant is accounted for in columns 5 to 8, inclusive. Therefore, for each occupant, adding from left to right, the sum of the flying time entered in columns 5 to 8, must equal the total time of the flight or series of flights by that crew.

(b) If only one crew is entered on Form 1, the total time of all terminal flights must be the time entered as "Total Flight Time" at the bottom of column 10, and this entry must check with the sum of entries in columns 5 to 8 for each occupant.

(c) If flights by more than one crew are entered on a Form 1, audit the flight time of each crew separately. In such cases, the sum of the entries in columns 5 to 8 for each occupant must equal the terminal flight time or the sum of the terminal flight time entries in column 10.

(d) Where a flight by one crew shows several terminal stops (columns 9 and 10), check the addition of the elapsed time of the several stops as entered by the pilot under the last entry of elapsed time for that crew, in column 10.

(8) Audit the entries of pilot time and entries of co-pilot time to see that they agree with entries in column 10, as follows:

(a) Where, during a flight or series of flights by one crew, more than one individual has performed duty as principal pilot (duty symbol "P"), the sum of the flying time entered in columns 5 to 8, inclusive, under symbol "P" for the various pilots must equal the entry in column 10 of the elapsed time of the flight, or the total time of the series of flights, as entered by the pilot.

1. An exception to this case will exist when, under the provisions of A. C. Circular 60-19, concurrent pilot time is entered for two pilots in the same airplane. In this case, the sum of the time entered on Form 1 under the duty symbol "P" will not equal the elapsed time of the flight, but will exceed the flight time by the amount of such concurrent pilot time. Auditing personnel must check to see that concurrent pilot time is entered only under the conditions authorized in A. C. Circular 60-19.

(b) The same audit as outlined above must be made to determine that the sum of all co-pilot time equals the elapsed time of the flight or series of flights.

(9) Check the entry of elapsed time for each terminal flight, in column 10, by deducting the time of take-off from the time of landing.

(10) Add the entries of elapsed time of all flights in column 10 to see that the sum agrees with the entry "Total Flight Time". Where two or more terminal flights are entered for one crew, the sum of the elapsed time of such terminal flights, as entered by the pilot, must equal the "Total Flight Time".

(11) Check the Mission Symbol entered in column 9 to see that the proper symbol has been used.

(12) Having completed the examination and audit procedure, the auditing clerk must initial both the original and duplicate Forms 1 in the space headed "Checked: Legible and Correct".

1. Transmittal sheet and change report--Following the detail examination and audit of the Forms 1 for the previous day's flying, the "Total Flight Time" of all Forms 1 for that day must be added, the number of Forms 1 counted and the resulting totals entered on a Transmittal Sheet and Change Report, provided locally.

(1) The transmittal sheet and change report must be prepared on letter-size paper, in a form essentially as follows:

(a) Heading: "Transmittal Sheet and Change Report".

(b) Station_____Organization _____ Date _____

(c) Attached are (number) Forms 1 totalling (Hrs. & Min.) flying time for (date).

(d) Changes in personnel holding an aeronautical rating, or on flying status are reported as follows:

Reported for Duty: (Assigned or attached for flying).

Serial No.	Name and Rank	Arm or Service	*To Organization
_____	_____	_____	_____
_____	_____	_____	_____

*Show Group and Squadron, or other activity.

Departed: (Change of Station or Organization)

Serial No.	Name and Rank	Arm or Service	From Organization
_____	_____	_____	_____
_____	_____	_____	_____

(e) The following pilots successfully passed the instrument flying test as prescribed by A. C. Circular 50-1:

Serial No.	Name and Rank	Organization
_____	_____	_____
_____	_____	_____

(f) Signed _____ (Name and Rank)

Organization _____

(2) The Transmittal Sheet and Change Report must then be turned over with the Forms 1 to the Operations Officer or his designated assistant who must examine and spot-check the Forms 1 to ascertain that the examination and audit work has been properly performed.

(3) The Operations Officer, or his designated assistant, must then enter on the Transmittal Sheet and Change Report, a report of pilots who, on flights included in the Forms 1, passed the instrument flying test as part of the prescribed minimum flying requirements.

(4) Each working day the Forms 1 for the previous day's flying, with the Transmittal Sheet and Change Report must be mailed to the Assistant Chief, Materiel Division, Wright Field, Dayton, Ohio. Forms 1 received by mail from pilots away from the station on extended flights must be audited and included with the current day's Transmittal Sheet and Change Report.

m. Schedule of Procedures with respect to the Flight Reports--Operations Officers must establish a schedule that will provide for delivery of Forms 1 pertaining to each day's flying. These forms are to be delivered to the Operations Office within the first hour of the next succeeding working day and must include those received from pilots on extended flights, either upon return to the station or by mail. The examination and audit of Forms 1 and their transmittal to the Assistant Chief, Materiel Division, Wright Field, Dayton, Ohio, must be made on the same day as received in the Operations Office.

n. Use of Form 1 to Report Time on Instrument Flying Trainer.

(1) Time on a modernized Instrument Flying Trainer, performed in meeting the minimum annual instrument flight requirements, must be reported by the officer in charge of the Instrument Flying Trainer, using Form 1 as follows:

(a) Make all pertinent entries at the head of the form, entering "Link Trainer" in the space for airplane model.

(b) In columns 1, 2 and 3, make entries pertinent to the individuals who took training that day.

(c) In column 5, for each individual, enter the duty symbols "p" and "I" and enter thereunder the time in hours and minutes.

(2) A separate Form 1 must be used each day for each organization to report the Instrument Flying Trainer time by personnel of that organization.

(3) At the end of each day, the original and duplicates of the accomplished Forms 1 must be forwarded to the pertinent Operations Officers.

(4) Operations Officers must supervise the examination and audit of the Forms 1 used in this manner and forward the original with the current day's mailing of Forms 1 to the Assistant Chief, Materiel Division, Wright Field, Dayton, Ohio. The duplicate copy is retained by him for use and final disposition as directed locally.

o. Reporting forced landings and accidents--In event of a forced landing resulting from any failure or malfunctioning of materiel, the pilot must report the occurrence on Form 1A, describing the failure or malfunctioning; pertinent operating conditions; known causes and damage.

(1) In the event of a forced landing due to weather, pilot getting lost, or any other non-materiel cause, the pilot must report the occurrence on Form 1, using any available space thereon and describing the conditions and causes of the forced landing.

(2) In the event of an accident the pilot must report the occurrence on Form 1, using any available space thereon. This report must be a brief of the occurrence, stating approximate damage, injuries, and causes where known. This report in no way relieves the pilot of subsequently tendering a full and complete statement of the accident, as required in A.C. Circular 15-14.

p. Erasures on Form 1--As it is important that Forms 1 be readily legible, when erasures and corrections are made by the pilot or by the mechanic, the procedure as outlined below must be followed:

(1) Make erasure on the duplicate by lifting the original and the carbon sheet, and make the erasure cleanly.

(2) Make the erasure on the original.

(a) Lift the original only and insert the front cover over the carbon sheet to prevent smudging the duplicate.

(b) Make erasure on the original.

(c) Remove the front cover from under the original.

(d) See that carbon sheet is smoothly in place.

(3) Make the corrected entry.

g. The use of code symbols in accomplishing the flight reports--The codes as printed on the inside front cover as to a large extent, self-explanatory. As the code symbols are extremely important to accurate tabulation of flight records,care must be exercised to enter them correctly to avoid error, the use of several of the symbols may be outlined as follows:

(1) Personnel Class Symbols:

(a) Entry is not required for personnel not on flying status.

(b) Symbols 11 to 17 and 21 to 25, should not be used for students and instructors at Flying Schools. They should however, be used for students and instructors at other than flying schools.

(c) Symbol 15 - (Flying Cadet, Rated) is used only in case a flying cadet has received an aeronautical rating and remains on flying cadet status.

(d) Symbol 22 (14-Day Trainees, Air Corps) is used for an Air Corps Reserve officer, who is on 14-day duty or on an extension of such duty.

(e) Symbols 31 to 38 must be used for all students at all flying schools but should not be used for students at other than flying schools.

(f) Symbols 41 to 46 must be used for all instructors at all flying schools, but should not be used for instructors at other than flying schools.

(g) Symbols 51 to 56 must be used for State National Guard personnel, not Federalized, except that when a National Guard Officer is assigned as a student at a Flying School, symbol 33 must be used.

(h) Symbols 61 to 66 must be used for Federalized National Guard personnel, excepting that symbol 33 should be used for Federalized National Guard personnel assigned as students at a Flying School, and symbol 44 for instructors at a Flying School.

(2) "Duty" Symbols:

(a) The symbol "P" (Pilot) must be used only in connection with flying time as principal pilot at the controls, except that the symbol "P" may be shown for two pilots on the same flight when instructor-pilots and student-pilots exercise concurrent pilot functions in an airplane equipped with dual controls, during an authorized course of airplane pilot training.

(b) The symbol "CP" (Co-pilot) must be used only when at the co-pilot controls in those airplane models for which a minimum of two pilots is specified.

(c) The symbol "C" (Command Pilot) may be used only by persons holding a Command Pilot rating when not at the controls, either as principal pilot or co-pilot. The symbol "C" may be used when directing an air unit, even though the airplane is of a model for which a Command Pilot is not authorized provided the Command Pilot is not at the controls.

1. The duty symbol "C" must not be used in any case when at the controls as either pilot or co-pilot, nor for more than one individual concurrently in the same airplane.

(d) The symbol "OS" must be used by personnel of other Arms and Services who are on flying status when performing flights in compliance with their flying status orders.

(e) The symbol "OB" (Observer) must be used for flying time as either Combat Observer or Technical Observer.

(f) The duty symbols "P", "CP", "C", "OS", "OB", "O", and "X" must always be entered singly and never combined for one individual with any other duty symbol for the same flying time.

(g) One of the duty symbols "B", "N", "R", "G", "E", and "PH", may be combined with another of those symbols when the individual is concurrently performing two such duties, as for instance, "BG" for Bombardier-Gunner.

(h) Other duty symbols are self-explanatory as printed on the inside front cover of the Flight Report pad.

(3) Night or Instrument Symbols-

(a) The symbol N (Night) must be used in connection with the time flown at night, for personnel who are required to fill the minimum specified night flying requirement.

(b) The symbol I (Instrument) must be used in connection with time flown on instruments, for personnel who are required to perform the minimum specified instrument flying.

(c) Personnel are reminded that flying the specified hours at night or on instruments does not in itself comprise compliance with the minimum requirements. To remain on an "Unlimited" status, such flying must be done at a duty position consistent with the individual's rating and under the conditions stated in A. C. Circular 50-12.

(4) Mission symbols -

(a) The basic purpose symbol entered must be that symbol which indicates the purpose of the flight, for example:

1. Symbol U (Unit Training Program) refers to flights which are a part of the organization's training program.

2. Symbol P (Individual Proficiency) refers to flights which are made for the sole purpose of improving the proficiency of one or more individuals in one or more technical or professional subjects, but not a part of the organizationk training program.

(b) A specific phase symbol must be used, when applicable, to further describe the basic purpose. For example, symbols U-1 would be used for a bombing or gunnery flight ordered as part of the Unit Training Program and symbols P-5 would be used for a flight made for the purpose of practicing blind approaches.

(c) The Liaison Operations Symbols must be used for flights performed for, or in cooperation with a non-Air Corps activity. Such flights may or may not be a part of the Unit Training Program.

19. Flight Envelope (A. C. Form No. 9)--a. The Flight Envelope is carried by all aircraft departing from their home stations on other than airdrome flights and contains the following items:

(1) One pad, Invoices, Air Corps Form No. 15.
(2) Six each, Damage to Property Certificate, Air Corps Form No.17.
(3) Twelve each, Government Telegrams, Standard Form No. 14A.
(4) Six sheets, Blank Paper, Letter Size.
(5) Three Penalty Envelopes.
(6) One Indelible Pencil.
(7) One copy, Army Regulations 95-120.
(8) One copy, Technical Order No. 01-1-31.
(9) One copy, Air Corps Circular 15-15.
(10) One copy, Air Corps Circular 65-23.
(11) One copy, Air Corps Circular 85-3.
(12) One Protractor.
(13) One Standard Map of the United States on a scale of approximately 50 miles to the inch, except that aircraft operating outside of the continental limits of the United States will carry in lieu thereof a suitable map of the surrounding country over which aerial flights may be required.

b. A number of Flight Envelopes, complete with contents, normally a sufficient amount to supply the maximum number of aircraft which may be expected to be absent from the station at one time, are maintained by each Station Operations Officer. Each envelope is sealed by a paper or suitable cloth label, about 3" by 4" in size, which bears, substantially, the following information, amended as required to meet the needs of each activity:

FLIGHT ENVELOPE NUMBER 1
* * * *

If found, please return to
Station Operation Officer,
BOLLING FIELD,
ANACOSTIA, D. C.

****

THIS LABEL NOT TO BE TORN
OR REMOVED UNLESS NECESSARY
TO USE OR CHANGE CONTENTS
***

c. Flight Envelopes, made up as prescribed above, are issued in either of the following ways, as prescribed by the local Commanding Officer:

(1) By the Operations Officer to pilots on Memorandum Receipt, together with Clearance authorizing the pilot's departure for the specific flight. Upon completion of flight, the pilot must return the Flight Envelope to the proper Operations Officer where, if the label is unbroken, the envelope is returned to file or, if the label has been broken, the contents must be checked, the missing items replaced, the envelope resealed and returned to file.

(2) A Flight Envelope may be issued permanently to an airplane, in which case it is included among the items to be inspected daily by the crew chief. In case the crew chief finds the seal broken, he must immediately return the envelope to the proper operations office and obtain a sealed envelope, which must be placed in his airplane. The Flight Envelope, with broken seal, is then checked by the Operations Officer, the missing items replaced, and the envelope resealed and returned to the file.

d. Before departure from their home station for the purpose of ferrying aircraft from plants of contractors or between stations, all pilots are issued a Flight Envelope.

20. Invoice (A. C. Form 15)--a. General--The A. C. Form 15, illustrated in figure 15, must be used by personnel concerned, to invoice all emergency procurements of services and supplies, in accordance with the following instructions:

b. Preparation of the form--The form must be prepared in quadruplicate by the use of an indelible pencil, ink, or typewriter.

(1) Separate invoices must be prepared for each of the following classes of purchases:

(a) Fuel, lubricating oil, grease, etc.

(b) Service and miscellaneous materials and supplies.

(2) Under decision of the Supreme Court of the United States, government automotive vehicles, traveling on official business, are not subject to state or local taxes on motor fuels, lubricants and anti-freeze liquids. This decision also applies to government-owned aircraft. Invoices covering the purchase of such items must have the purchase price and amount of state or local taxes recorded as separate entries. The tax rate per unit quantity must be entered in the spaces provided.

(3) An example of the preparation of the body of the form is indicated below:

Airplane:	Articles or Service	Quan.	Unit	Unit Price:	Total
32-110	Gasoline	75	Gal	$ .18	$13.50
	State Tax (.02 per gal.) is (~~is not~~) included.				1.50
	Local Tax (.02 per gal.) ~~is~~ is not included.				
	Federal Tax ~~is~~ (is not) included. Note: Always insert unit tax for fuel and oil. Cross out references not applicable.				
				Total	$15.00

(4) All copies of the forms covering the procurement of supplies and services, must be signed by the individual procuring the material and the dealer, on the bottom of the form in the space provided. The quadruplicate copy must in all cases be given the dealer at the time of procurement. The original and first two copies must then be mailed immediately by the individual procuring the supplies or services, to the Air Corps Supply Officer of the home station of the aircraft except for aircraft being transferred (with accountability), in which case they must be mailed to the Supply Officer of the station to which the aircraft is being delivered.

(5) In case of wreck or other circumstances enroute, preventing delivery to the destination, the original and two copies must be returned to the home station. The "home station", as used in the foregoing, must be that from which the aircraft are being transferred. In cases where an aircraft, accepted for fly-away at a contractor's plant, is wrecked or delivery to destination is prevented by other circumstances, the original and two copies must be forwarded to the Contracting Officer, Wright Field, Dayton, Ohio. In cases of aircraft that have been loaned, the receiving station must function as the home station.

21. Damage to Property Certificate (A. C. Form 17)--a. This form as illustrated in figure 16 is for the purpose of securing a signed statement from owners of property to which damage may have been incurred due to a forced landing or crash of army aircraft.

b. Where damage has been done to property, the nature of the damage and the estimated value must be stated on the form. Where the estimate of the owner of the property does not agree with the estimate of the pilot, an estimate of both must appear on the form.

c. The form must be prepared in duplicate, one copy going to the owner of the damaged property and one copy to the Operations Officer of the Base to which the airplane is assigned.

22. Clearance for Aircraft (A. C. Form 23)--a. The Clearance for aircraft, illustrated in figure 17, is used by all Air Corps activities for clearance of pilots leaving their airdrome on cross-country missions which will extend beyond their local flying area or which will necessitate the

WAR DEPARTMENT
AIR CORPS
Form No. 15
(Revised May 29, 1937)

WAR DEPARTMENT
AIR CORPS

INVOICE

Date_____

THE UNITED STATES, Dr.

To_____
(Write plainly name and address of firm or individual from whom supplies or service were obtained)

Address_____

Airplane No.	ARTICLES OR SERVICES	Quan.	Unit	Unit Price	TOTAL
	Clause on reverse side is made a part of this contract.				
	State tax (_____ per gal.) is (is not) included **Local tax (_____ per gal.) is (is not) included** **Federal tax is (is not) included** **Note.—Always insert unit tax for fuel and oil.** **Cross out references not applicable.**				

I certify that the above articles are for the exclusive use of the United States and have been received by me in good condition, in quality or quantity, or services performed as stated; and that this purchase was necessary because the supplies could not be secured at a Government station.

I further certify that this flight was authorized per:

_____

Name _____

Rank _____ Station _____

TOTAL_____

I certify that the above is correct and just, and that payment therefor has not been received.

Name of firm_____

By_____

Official capacity_____

3—9475

Figure 15. Invoice (A. C. Form 15)

aircraft remaining on the ground away from its home station overnight. The form is also used for the clearance of all local flights where the crossing of a civil airway is contemplated when conditions require an instrument clearance and may be used for the clearance of such other local flights as station commanders prescribe. In case of unit navigation in formation or unit navigation with airplanes at specified intervals, the leader or commanding officer of such a flight may obtain a clearance for all airplanes in the flight. It is then his responsibility that all pilots in the flight are familiar with the flight plan and weather conditions enroute and are properly equipped and prepared for the flight.

b. Clearing authority and responsibility--Clearance of aircraft for cross-country missions is authorized only by station commanders, who have available at all times a duly authorized representative to act on all applications for clearance for such flights.

(1) Before authorizing clearance of Army aircraft for cross-country flight, the clearing authority must assure himself of the following:

WAR DEPARTMENT
AIR CORPS
Form No. 17
(Approved June 15, 1927)

WAR DEPARTMENT

AIR CORPS

DAMAGE TO PROPERTY CERTIFICATE

(Address of owner or tenant)

(Date)

I hereby agree that the landing on my premises, on the above date, of Army Airplane No. ---------- from ---------- resulted in no financial damage whatsoever to my property.

(Signature of pilot)

(Signature of owner or tenant)

(Address of owner or tenant)

(Date)

I hereby agree that the landing on my premises, on the above date, of Army Airplane No. ---------- from ---------- caused the following estimated damage:

(Signature of pilot)

(Signature of owner or tenant)

Fig. 16. Damage to Property Certificate (A. C. Form 17)

WAR DEPARTMENT
Air Corps
Form No. 23
Revised August 11, 1939

AIRCRAFT CLEARANCE

Date _____

OPERATIONS OFFICE _____

CREW AND OTHER OCCUPANTS NAME AND RANK

1_____ (Pilot) 5_____ 10_____

2_____ 6_____ 11_____

3_____ 7_____ 12_____

4_____ 8_____ 13_____

9_____ 14_____

_____ (Airplane model and A. C. Number) _____ (Destination—Airport) _____ (City or post) _____ (Proposed time of take-off)

Authorization:

Clearance of personnel and aircraft to destination as shown above is authorized within 1 hour of the time shown.

_____ (Clearance authority)

Clearance officer _____ (Signature—If instrument clearance)

FLIGHT PLAN

			Color	*From—*	*To—*	*Altitude*	*Airways To Be Crossed* (Place and time)
_____ (N or C)	_____ (To depart—Time)	1					
_____ (Cruising air speed)	_____ (Est. flight time)	2					
_____ (Alternate airport*)		3					

_____ (Approval received*) _____ (Call letters) Check if receiver only ☐ _____ Kc. _____ Kc. _____ Kc. (Transmitting frequencies)

*Instrument clearance only.

I certify that I have given thorough consideration to the following factors: 1. Necessary maps _____ 2. Emergency equipment _____ 3. "Notices to Pilots" affecting the proposed flight _____

(Signed) _____
Pilot.

WEATHER

Station	*Time*	*Weather Report*	*Forecast Trend*
_____	_____	_____	_____
_____	_____	_____	_____
_____	_____	_____	_____
Destination _____	_____	_____	_____
Alternate airport _____	_____	_____	_____

Winds aloft _____ (Time) _____ (Reporting station) Remarks: _____

(Surface)	(2,000)	(4,000)	(6,000)	
_____	_____	_____	_____	_____
(8,000)	(10,000)	(12,000)	(14,000)	(Name of weather man)

OPERATIONS OFFICE RECORD: Take-off _____ (Time) _____ (Take-off reported by) _____ (Take-off report received by)

_____ (Est. flight time) _____ (E. T. A.) _____ (Departure message sent by) _____ (Time) _____ (Via—Means of communication)

Flight plan submitted to _____ (Name of control station) _____ (Time) Approval received _____ (Time)

Fig. 17. Clearance for Aircraft (A. C. Form 23)

(a) That proper authority for the flight has been granted.

(b) That the equipment and the state of the pilot's or pilots' training are such that satisfactory completion of the flight mission can be reasonably expected, giving due consideration to existing and forecast weather conditions.

(c) That if the flight is to be conducted along or at any time cross a civil airway, existing civil air regulations are complied with in regard to flight plan and clearance.

(2) Station commanders may accept the recommendations of the tactical commander of a squadron or larger unit in regard to the equipment and state of the pilots' training, and upon such acceptance be relieved of responsibility in that regard. In such cases the tactical commander must personally sign the clearance form on the line designating the authorization.

(3) At an Air Corps station where there is no Air Corps officer present for duty, the clearing authority for transient aircraft is the pilot in the case of an individual airplane, or the Commanding Officer in the case of a unit or flight. In all other respects at such stations, the non-commissioned officer in charge acts in the capacity of station commander.

c. Preparation and entries--Form 23 consists of two parts, an original and a duplicate copy. Upon accomplishment, the duplicate is retained in the Operations Office, and the pilot gives the top portion of the original to the individual from whom he receives the airplane, himself retaining the flight plan and weather data.

(1) When the aircraft actually takes off, the ground personnel responsible for the aircraft must notify the Operations Office of the time of departure. The Operations personnel then enters on the retained copy, the time of take-off, the names of the individuals who gave the notification and who received it. The individual who reported the departure to the Operations Office must also enter the time of departure, his name and the name of the individual to whom notification was given on the original copy and file it as a retained record.

(a) As an alternate procedure to the above, station commanders may prescribe that the notification of take-off be reported to the Operations Office by the Control Tower. However, if this procedure is instituted, the ground personnel responsible for the aircraft must still enter the time of take-off and file the portion of the original copy received from the pilot.

(2) After the receipt of notification of take-off, the Operations personnel must file the required departure messages and complete the entries on the bottom of the duplicate copy of the form.

(3) The retained portions of the originals may be removed from the files and destroyed one week after the effective date, while the duplicate copies of this form may only be removed from the files and destroyed after the expiration of one year, provided they have been examined by a representative of the Inspection Section, Office, Chief of the Air Corps.

d. Definitions and explanations of the form--(1) Types of clearance--For any aircraft clearing a military airdrome, the type of clearance is determined as follows:

(a) Contact (abbreviated C)--A clearance is classified as "Contact" when existing and forecast weather conditions at all points along the proposed route afford a minimum ceiling of 1,000 ft. and visibility of three miles during daylight and a minimum ceiling of 1,500 ft. and visibility of five miles at night.

1. Commanding Officers are authorized to set higher minima than those stated above, when in their judgment this is desirable in consideration of the terrain along the route and the peculiarities of local weather phenomena.

(b) Instrument (abbreviated N)--A clearance is classified as "Instrument" when the ceiling or visibility is less than the conditions specified for a contact clearance. In spite of the fact that flights may be frequently completed without loss of visual references under weather conditions requiring an instrument clearance, the added precautions are considered justified. Any airplane cleared under this classification must be equipped for intentional instrument flight.

(2) Specific requirements by type--The following requirements govern the accomplishment of the clearance form under the two above specified classes of clearances:

(a) Contact:

1. All indicated items of information must be entered under the section of the form marked "Flight Plan" except those marked with an asterisk.

2. Only the current weather report showing the least favorable flying condition along the route need be entered under the section marked "Weather".

3. The Clearance Officer is not required to sign the form personally, unless local orders are issued to such effect.

(b) Instrument:

1. All indicated items of information are entered under the section of the form marked "Flight Plan". If conditions are such that approval of the flight plan is required in accordance with Civil Air Regulations by other than the clearing authority, the name of the approving office is entered as indicated when approval is received.

2. Under the section marked "Weather," weather service personnel, if available, otherwise the pilot, must enter the current weather reports in the teletype code for the following points:

(a) Two critical points along the route, if available.

(b) The destination.

(c) The alternate airport.

3. A duly authorized clearance officer must personally sign the form as indicated.

4. In all cases where approval of an instrument flight plan has been granted by a civil airways traffic control station and departure is delayed beyond the approved time, approval must be obtained for another time of departure before actual take-off is made.

(3) Restrictions governing the selection of alternate airports--The following restrictions govern the selection of an alternate airport:

(a) The airport selected must be within reach of the original destination with sufficient fuel remaining to permit forty-five mimutes additional flight at normal cruising consumption.

(b) The existing and forecast weather conditions at the alternate airport must provide the following minimums:

1. When equipped with directional radio aid to air navigation, which is then in operation, a minimum ceiling of 2,000 ft. and a visibility of five miles if overcast or a minimum ceiling of 1,500 ft. and a visibility of five miles under conditions of broken clouds.

2. When not equipped with an operating radio directional aid, an unlimited ceiling and a minimum visibility of three miles.

(4) Additional Weather Data--Space is provided under the section marked "Weather" for information in addition to the required entries previously mentioned which, if desired by the pilot or if directed by local orders, may be accomplished by weather service personnel as follows:

(a) In the spaces marked "Forecast Trend" entries may be made only by such weather service personnel as are deemed qualified by the station commander. If there is no specially trained weather officer at a post, the station commander may ask the Weather Regional Control Officer for recommendations as to personnel considered qualified as forecasters. Appropriate entries under "Forecast Trend" include anticipated changes in ceiling and visibility as well as deliniation of hazards, such as icing, gustiness, etc.

(b) Under "Remarks" a route forecast, made either by qualified Army or Weather Bureau personnel may be entered and the source designated.

(c) Space is provided for the entry of a representative "wind aloft" report.

(5) Pilot's Certificate--The pilot must check the three items listed in the certificate which signifies that he has given consideration to the following:

(a) Necessary maps, to provide for the possibility of being required to deviate from the original flight plan due to weather.

(b) Emergency equipment, as required by Air Corps circulars or local orders.

(c) "Notices to Pilots", affecting the proposed flight. These notices must be shown the pilot by operations personnel.

(6) Times--All times must be entered on the basis of a twenty-four hour clock.

(7) Clearance by Radio--It is occasionally desirable for the clearing agency at the station of original destination to grant a clearance by radio for incoming aircraft to a new destination without necessitating the landing of the individual aircraft or flight.

(a) In each case of clearance by radio, all practical provisions herein stated will apply and in addition the pilot or flight commander must inform the clearing agency of the exact number of hours for which the remainding fuel will permit flight at cruising consumption.

(b) A radio clearance is not considered as effective until the clearing agency advises that all required information has been received and that approval is granted for the new flight plan.

(c) If a clearance is granted, the operations personnel must accomplish the copy of the clearance form to be retained for record and in addition, enter all pertinent facts involved.

23. Forced Landing Report--a. General--A report of every forced landing must be prepared in accordance with the detailed instructions described in subsequent paragraphs. The Airplane Flight Report, Air Corps Forms Nos. 1 and 1A must be improvised as outlined herein for reporting forced landings and when so used is known as Forced Landing Report.

(1) A forced landing is defined as an unpremeditated landing necessitated by conditions which could not be overcome while in flight, such as engine or other mechanical trouble or defect, exhaustion of fuel, bad weather, or loss of bearings.

(2) Forced landings are divided into two classes, which may be defined as follows:

(a) Emergency Forced Landing. A forced landing <u>immediately</u> necessitated by conditions which could not be overcome while in flight.

(b) Deferred Forced Landing. A forced landing necessitated by conditions which could not be overcome while in flight and which make continued flight inadvisable but do permit a reasonable time for the selection of a landing area.

b. Preparation of the form--Immediately following a forced landing, regardless of whether or not it resulted in accident, the pilot, after accomplishing the Airplane Flight Reports as required must enter his report of the forced landing as follows:

(1) Across the top of the report write the title "Report of Emergency Forced Landing" or "Report of Deferred Forced Landing" as the case may be.

(2) In a suitable blank space, indicate the forced landing as having occurred on flight number 1, 2, 3, or 4, etc., and write a detailed account of the occurrence. This account must state all pertinent conditions; all observed indications of the trouble and all known causes as well as their results. If there is insufficient space for the description, an additional blank form may be used to extend the report.

(3) After accomplishing the above, the pilot must sign the form, giving his rank, and if other than Regular Army, his status, such as "Reserve, Extended," "Reserve, Inactive", "Reserve , 14-day Duty", etc.

c. Routing and entries--The Forced Landing Report is left in the pad of forms until the return of the airplane to its home station, except that if the airplane is to be absent over the end of the month, completed reports must be mailed to the home station on the 27th of each month.

(1) Upon receipt of a Forced Landing Report at the home station of the aircraft, the organization Operations Officer must take action as follows:

(a) If the forced landing resulted in accident, prepare sufficient true copies (including both sides of the form) for attachment to the Technical Report of Aircraft Accident Classification Committee, required for such cases.

(b) If the forced landing did not result in accident, the action will depend upon the cause, as outlined below:

1. Non-mechanical troubles--If caused entirely by weather, darkness, loss of bearings, errors of maintenance or supervisory personnel, etc., and in no part caused by mechanical failure or malfunctioning of equipment, the organization Operation Officer must add his comment as to the cause, whether or not the circumstances were avoidable, etc.,and forward the original report to the organization Engineering Officer for file.

2. Mechanical failures--If caused by a mechanical failure or malfunctioning of the airplane or installed equipment, the organization Operations Officer must prepare three true copies of the form and forward the original and all true copies to the organization Engineering Officer for action and routing.

d. Duties of the Organization Engineering Officer with respect to the Forced Landing Report--The organization Engineering Officer must make a prompt and thorough investigation of the forced landing to determine, in so far as possible, all causes, both immediate and underlying or contributory. His investigation must include, if necessary, an interview with the pilot, previous pilots, crew chief, flight chief, station engineering officer, etc.; inspection of the aircraft, engine, previous flight reports, maintenance inspection records, etc. Flight tests must also be conducted if they will

show anything of value.

(1) At the completion of this investigation, the officer must enter on the Forced Landing Report, a statement of his conclusions as to the cause of the forced landing. His statement should be thorough as to his opinion of the failure of specific parts or assemblies, and the origin thereof, or condition which started the trouble, such as faulty materiel, workmanship or operation; faulty inspection at the factory, the depot, or by the maintenance crew. These entries must also include, when applicable, recommendations for the prevention of similar occurrences.

(2) If required, the officer must prepare an Unsatisfactory Report in quintuple and properly tag defective parts, if submitted, then forward all three true copies of the Forced Landing Report and four copies of the Unsatisfactory Report, together with the defective parts, if any, to the Station Engineering Officer. The original copy of the Forced Landing Report must be filed for future reference.

e. Duties of the Station Engineering Officer with respect to the Forced Landing Report--The Station Engineering Officer must make such additional investigations as he deems necessary to determine the cause of the trouble and add to the statement of the Organization Engineering Officer an indorsement containing the following:

(1) A casual analysis of the forced landing in the same manner as that prescribed for an aircraft accident analysis, together with sufficient facts and explanation to bear out such an analysis.

(2) A statement as to whether or not an Unsatisfactory Report is being submitted. If this is the case, refer to it by date and number, and if not submitted, the reason therefor.

(3) Forward to the Commanding Officer all three true copies of the Forced Landing Report and the first three copies of the Unsatisfactory Report, if one was prepared.

f. Duties of the Commanding Officer with respect to the Forced Landing Report--The Commanding Officer must review the complete report and inclosures, adding such comment as he desires, and forward it as follows:

(1) The original Forced Landing Report and duplicate Unsatisfactory Report directly to the Chief of the Air Corps.

(2) The duplicate Forced Landing Report and original Unsatisfactory Report directly to the Chief of the Materiel Division.

(3) The triplicate Forced Landing Report to the Organization Engineering Officer for file.

g. Occurrence of forced landings away from the home station--Whenever a forced landing, caused by mechanical failure or malfunctioning, occurs at a place within the jurisdiction of the Commanding Officer of a station other than the home station of the aircraft, the Engineering Officer of that station must make, in so far as possible, the investigation and the statement

required for the Forced Landing Report. In such cases, true copies of the Forced Landing Report need not be made away from the home station, but the Engineering Officer's statement must be made on the original form which is returned to the pilot for normal routing to the home station Organization Operations Officer.

24. Maintenance Inspection Record for Airplanes (A. C. Forms 41, 41A, 41B and 41C).--a. Classification of inspections--The periodic inspections, required on all aircraft in the Air Corps, are designated as the preflight, daily, 25-hour, 50-hour, engine change and special inspections. Each of these inspections are outlined in the following sub-paragraphs.

(1) Preflight inspection--The preflight inspection is a check of the airplane to determine that the instruments, controls, auxiliary systems, power plant, etc., are functioning properly; that all cowling, fuel and oil tank caps, etc., are in place and properly fastened or secured and that the airplane is properly serviced and ready for flight. This inspection is required on the following occasions:

(a) For all airplanes which are in commission:

1. Prior to the first flight each day.

2. At least once every six days during periods when the airplane is not flown. This does not include airplanes in "In Storage" status, undergoing engine change, or in the engineering shops and not being used for flight.

(b) For transient aircraft--Prior to departure from any station, whether or not a preflight inspection has been accomplished the same day at another station.

(2) Daily inspection--The daily inspection is a visual inspection to determine the general condition of the airplane and engines and is designed to detect aggravated conditions, maladjustments, breaks, etc. If practicable, the daily inspection should be accomplished during a period definitely set aside for that purpose, either after the day's flying is over or before the start of flying the following day. The daily inspection and routine work must be performed on all airplanes once each calendar day, with the following exceptions:

(a) Sundays, holidays and other days when the regular crews are not assigned for hangar duty and the airplane is not flown.

(b) When no flights have been made since the last daily inspection and the record shows that the last daily inspection was complete and the airplane in good mechanical condition.

(c) When the airplane is in "In Storage" status. This designation is made by a written order of a responsible officer, entered on Form 41, in the section headed "Status Today", and signed by such officer. "In Storage" status may include an airplane awaiting arrival of parts or one not required for a prolonged period.

(d) When the airplane is in the engineering shops and not being used for flights.

(e) When the airplane remains overnight at a place where no Air Corps enlisted or civilian mechanics are present for duty or are traveling with the airplane. In such cases, the "exceptional release" must be signed on the Airplane Flight Report. No airplane may remain more than six days without a daily inspection unless in "In Storage" status or in the shops undergoing overhaul or repair.

(3) 25-Hour inspection--The 25-hour inspection includes the daily inspection and is designed to be sufficiently thorough and searching to allow the detection of slight wear and other early stages of deterioration. The 25-hour inspection must be accomplished between the 20th and 30th flying hours after the completion of the last previous 50-hour inspection, and no airplane must be allowed to remain more than one month without a 25-hour inspection, irrespective of its flying time, except airplanes in depots undergoing overhaul and airplanes in "In Storage" status. It is not necessary that the 25-hour inspection be performed as one continuous operation, with the airplane held "out of commission" from the time the inspection is started until the time the inspection is completed, unless local authority prefers to do so. The allotted period of ten flying hours, 20th to 30th permits the accomplishment of this inspection during normal maintenance periods without withdrawing the airplane from regular service or placing it "out of commission" for lengthy periods. Thus, it is permissible to spread the inspection over a period of several days, flying the airplane each day during the normal flying period and accomplishing part of the inspection each day during the normal maintenance period. When this operation is spread over several days, the inspection is considered "made" as of the time, i.e., flying hours, at which it is completed. If the inspection has not been completed by the 30th hour, a red dash, symbol for "Required Inspection Not Made," must be placed in the appropriate columns on the Maintenance Inspection Record. If "specialists", i.e., propeller specialists, instrument specialists, etc., are to assist in the accomplishment of this inspection, they should be assigned to the inspection of that equipment, as grouped in the columns of Form 41, which they are especially qualified to inspect and maintain.

(4) 50-Hour inspection--The 50-hour inspection includes the 25-hour inspection and is designed to be a complete, thorough and searching inspection of the entire airplane so far as it is within the scope of the visual inspection system. This inspection and maintenance must be accomplished between the 40th and 50th flying hours after the completion of the last previous 50-hour inspection and no airplane must be allowed to remain more than three months without this inspection, irrespective of its flying time, except airplanes in depots undergoing overhaul and airplanes in "In Storage" status. It is not necessary that the 50-hour inspection be performed as one continuous operation with the airplane held "out of commission" from the time the inspection is started until the time the inspection is completed, unless local authority prefers to do so. The allotted period of ten flying hours, 40th to 50th, permits the accomplishment of this inspection during normal maintenance periods without withdrawing the airplane from regular service or placing it "out of commission" for lengthy periods, as was previously described under the 25-hour inspection.

When the inspection and maintenance operation is spread over several days, the inspection is considered "made" as of the time, i.e., flying hours, at which it is completed. If the inspection has not been completed by the 50th hour, the red dash symbol for "Required Inspection Not Made", must be placed in the appropriate columns in the Maintenance Inspection Record. To avoid the necessity for maintaining the "Time Since Last 50-Hour Inspection" separately for each engine and the airplane, it is necessary that a 50-hour inspection be made upon completion of engine change, or that upon completion of such change the accumulated "Time Since last 50-Hour Inspection" be dropped. Whenever an engine is changed, the Engineering Officer of the unit or activity accomplishing the work must determine whether a 50-hour inspection will be made or whether the accumulated "Time Since Last 50-Hour Inspection" will be dropped. If "specialists", i.e., propeller specialists, instrument specialists, etc., are to assist in the accomplishment of the 50-hour inspection, they should be assigned to the inspection of that equipment, as grouped in the columns of the Maintenance Inspection Record which they are especially qualified to inspect and maintain.

(5) Engine Change--Engines will normally be removed for overhaul at the expiration of the period listed in Tables II and III of Air Corps Technical Order 00-25-4 (the desirable maximum number of flying hours between overhauls), except that additional flying time not to exceed 20 percent of the number of hours listed, may be authorized when the condition of the engine warrants. This authorization and final determination of the condition and serviceability of an engine will be a responsibility of the station or Air Base Engineering Officer, consideration being given, in addition to actual inspection of engines to any known characteristics peculiar to the equipment and to reports submitted by pilots on previous flights.

(6) Special (other) inspections--These special inspections are:

(a) The 100-hour, 200-hour and 300-hour inspections which will normally be added to and accomplished along with the regular 50-hour inspections as they become due.

(b) The weekly inspection, which is performed at weekly intervals regardless of flying time, and which will normally be added to the regular periodical inspections when feasible.

(c) The 25-hour inspection after engine change, which is always accomplished along with the first regular 25-hour inspection following each engine change.

b. Maintenance Inspection Record Forms--The inspection and maintenance of all airplanes in the Air Corps require the use of the following record forms:

(1) Air Corps Form 41 (Maintenance Inspection Record) is used in connection with the inspection and maintenance of all airplanes having one or two engines, and gives a complete history of the operation of the airplane during the period covered. This form provides a certified record of all inspections and maintenance that can be readily inspected by supervisory maintenance personnel and unit or activity commanders, as well as a record of flying time and of supplies consumed. In additionit gives a

general outline of the work to be accomplished at the various inspection periods.

(2) Air Corps Form 41A, Index of Inspection Instructions, (Figure 17A), shows in general, the inspections and maintenance work required at each of the inspection periods and lists the Technical Orders to be used as reference in the performance of this work on the various units, assemblies, and systems.

(3) Air Corps Form 41B, Maintenance-Inspection Record (Figure 17B) is a reproduction of Form 41, in booklet form and is used in place of this form when the airplane is being used by Air Corps units or detachments maintaining and operating airplanes as units or detachments at bases other than the home station.

(4) Air Corps Form 41C, Maintenance-Inspection Record, is a counterpart of Form 41 for airplanes having four engines. It contains a sufficient number of certain columns or sections of columns for data pertaining to four engines, whereas, Form 41 only provides a sufficient number of these for two engines.

c. Installation of the Form--Form 41 should be mounted on a standard mounting board. This board should be installed in a well lighted place, readily accessible to mechanics, inspectors and responsible officers and as near as practicable to the usual hangar location of the airplane.

d. Symbols--Data relative to the inspection status, results of inspections, mechanical condition of the aircraft and maintenance work performed will be recorded in the columns provided for that purpose by means of symbols as explained in the following sub-paragraphs:

(1) Red Cross (X)--This symbol indicates the existence of a defect or other unsatisfactory condition of such nature that until the defect is corrected or the condition remedied, the aircraft is unsafe or unfit for flight.

(a) Whenever a defect or other unsatisfactory condition exists in any system, part or assembly of the aircraft of such a nature that it renders the aircraft unsafe for flight; or whenever maintenance work is required of such nature that, if it remains unaccomplished, the airplane will be unsafe for flight; a red cross must be entered in the column provided for recording the status of the particular system, part or assembly affected.

(b) Whenever the condition of any system, part or assembly is indicated by a red cross, the airplane must be grounded and it will not be flown until the defect is corrected or the necessary maintenance work accomplished and the airplane is placed in a safe condition for flight.

(c) It will not be necessary to enter a red cross to indicate an unsafe condition caused by the removal of parts or assemblies for inspection purposes when this removal is perfectly obvious and the mechanic who removed them remains at work on the airplane. However, if the removal of the parts or assemblies is not perfectly obvious or the mechanic leaves the immediate vicinity of the airplane, for any reason whatsoever, a red cross must be entered in the appropriate column of the form to indicate the airplane

WAR DEPARTMENT
AIR CORPS
Form No. 41A
Revised 10-1-40
WP-9-22-40-10M

INDEX OF INSPECTION INSTRUCTIONS

(FOR USE WITH T. O. No. 00-20A AND FORM No. 41)

NOTE: SEE T. O. 00-1 FOR APPLICABLE AIRPLANE AND ENGINE HANDBOOKS.

COLUMN NUMBER ON FORM No. 41	PRE-FLIGHT	DAILY	50 HOURS	100 HOURS	200 HOURS	300 HOURS	ENGINE CHANGE	25 Hours After Engine Change	SPECIAL	T. O. NUMBER	REMARKS
17 BOMBING EQUIPMENT											
A. C. Circular 15-43	–	–	–	–	–	–	–	–	–		
Bomb Door Mechanism—B-18, -18A	x	–	–	–	–	–	–	–	–	01-40E-78	
Bomb Indicator Light Switches—B-18 & B-18A	–	–	–	–	–	–	–	–	–	01-40E-18	
T. O. Series 11-5; 11-25; 11-30	–	–	–	x	–	–	–	–	–		
18 GUNNERY EQUIPMENT											
A. C. Circular 15-43	–	–	–	–	–	–	–	–	–		
Ejected Link & Case Chute Door—BC-1	–	–	–	–	–	–	–	–	x	01-60FA-10	Upon completion of each flight remove links & cases from ejection chute.
Blast Tube Covers—P-36 Series & P-37 Series	x	–	–	–	–	–	–	–	–	01-25C-35	
T. O. Series 11-20; 11-35	–	–	–	–	–	–	–	–	–		
19 TOW TARGET EQUIPMENT											
A. C. Circular 15-43	–	–	–	–	–	–	–	–	–		
T. O. Series 11-40	–	–	–	–	–	–	–	–	–		
Windlasses, Types C-4A & C-5, & Tow Targets, Type A-6	x	–	–	–	–	–	–	–	–	11-40-15	Prior to first towing mission involving use of windlass.
20 COMMUNICATION EQUIPMENT											
A. C. Circular 15-44	–	–	–	–	–	–	–	–	–		
T. O. Series 08-5; 08-10	–	–	–	–	–	–	–	–	–		
21 PHOTOGRAPHIC EQUIPMENT											
A. C. Circular 15-45	–	–	–	–	–	–	–	–	–		
T. O. Series 10-10	–	–	–	–	–	–	–	–	–		
22 OXYGEN EQUIPMENT											
Oxygen Equipment, Portable—B-17B	x	–	–	–	–	–	–	–	–	01-20EB-28	See Technical Order.
Oxygen Installation	x	–	–	–	–	–	–	–	x	03-50-1	Close valves and sterilize mouth pieces upon completion of flight.
Oxygen Regulator, A-6	x	–	–	–	–	–	–	–	–	03-50A-1	
25 ENGINE CONTROLS											
Ball & Socket Joints	–	–	x	–	–	–	–	x	–	01-1-80	
Carburetor Heater	–	–	–	–	–	–	–	x	x	02-1-5	See Technical Order.
26 ENGINE INSTRUMENTS											
Fuel Mixture Indicators:											
Breeze	–	–	x	x	–	–	–	x	–	05-3B-2	
Breeze, Types A-2, A-3, B-1 & B-2	–	–	x	x	–	–	–	x	–	05-3B-5	
Cambridge	–	–	x	x	–	–	–	x	–	05-3A-2	
Gage, Manifold Pressure, D-1	x	–	–	x	–	–	x	–	–	05-40-2	
Markings & Cover Glasses—Instruments	x	–	–	x	–	–	–	–	–	05-1-17	
Synchronism Indicators—A-4	–	x	–	x	x	–	x	–	–	05-5-3	
Synchroscope (Eclipse)	–	–	–	x	–	–	–	–	–	05-60A-2	
Tachometer, C-2	–	–	–	x	–	–	–	–	–	05-5A-1	
Tachometers, Electric (Types E-1 & E-4)	–	–	–	x	–	x	–	–	–	05-5B-1	
Thermometers	–	–	–	–	–	–	x	x	–	05-1-16	
Thermometers, Resistance Type	–	–	–	x	–	–	–	–	–	05-40-12	
Thermometers, Type B	–	–	–	x	–	–	–	–	–	05-40-3	
Vent Line, Manifold Pressure Gage	x	–	–	–	–	–	–	–	–	05-1-6	
Voltmeters, Ammeters & Volt-Ammeters	–	–	–	x	–	–	–	–	–	05-1-12	
27 IGNITION AND ELECTRICAL											
Battery	–	–	–	–	–	–	–	–	x	01-1B-1	Weekly.
Booster Coils	–	–	–	x	–	–	–	–	–	03-5-9	
Capacitors	–	–	–	x	–	–	–	–	–	08-5-6	
Dynamotors	–	–	–	x	–	–	–	–	–	03-5F-1	
Dynamotors, Alternators & Regulators	–	–	–	x	–	–	–	–	–	03-5F-2	
Generators & Control Units:											
Eclipse—											
Control Box	–	–	–	x	–	–	–	–	–	03-5AA-1	
Control Panel, B-1	–	–	–	x	–	–	–	–	–	03-5AA-3	
Leece Neville—											
Control Panels, A-1 & A-2	–	–	–	x	–	–	–	–	–	03-5AB-2	
Generators	–	–	–	x	–	–	–	–	–	03-5AB-1	
Generators, L-1 & M-1	–	–	x	x	–	–	–	–	–	03-5AB-3	
Magnetos:											
PN5-D & MN7-DF5	–	–	–	x	–	–	–	–	–	03-5D-1	
SB9R, SF9R, SF9L, SF9L-1, SB14R-1, SB14R-1a, SF14L-4, SF14L-3 & SF9L-2	–	–	–	x	–	–	–	–	–	03-5DA-2	
SC & DF	–	–	x	x	–	–	–	–	–	03-5D-5	
VAG	–	–	–	x	–	–	–	–	–	03-5D-4	
VMN7-DF	–	–	–	x	–	–	–	–	–	03-5D-7	
Lubrication of Retracting Motors—B-10, 10-A, 10B, 12, & 12A	–	–	–	x	–	–	–	–	–	01-35-30	
Motors—Electric (Tow Target Rewind)	–	–	–	x	–	–	–	–	–	11-40-16	
Pumps, Oil, Motor Driven (Pesco)	–	–	–	–	–	x	–	–	–	03-30CB-1	
Retracting Motors	–	–	–	x	x	–	–	–	–	03-5CC-1	
Retracting Motors	–	–	–	x	–	–	–	–	–	03-5CC-3	
Solenoid Switches	–	–	–	x	–	–	–	–	–	03-5C-2	
Spark Plugs	–	–	x	–	x	–	–	–	–	03-5E-1	
Starters:											
Breeze (Cartridge) Types E-3 & E-4	–	–	–	x	x	–	–	–	–	03-5CB-1	
Eclipse—											
Electric, Direct Cranking	–	x	–	x	–	–	–	x	–	03-5CA-2	
Starter Control, A-1, A1A, B-1 & C-1	–	–	–	x	–	–	–	–	–	03-5C-1	
Starters & Starter Motors	–	x	–	x	–	–	–	x	–	03-5CA-1	
Starters & Starter Motors	–	x	–	x	–	–	–	x	–	03-5CA-3	
28 FUEL SYSTEM											
Carburetor	–	x	x	–	–	x	–	–	–	03-10B-1	See T. O. for Carburetors to inspect at 200 hours.
Carburetors, Injection Type	x	x	x	x	–	–	–	–	–	03-10BA-2	
Controls, Fuel Cock	x	–	–	x	–	–	–	–	–	03-10-13	
Flexible Drive, Fuel Pump	–	–	–	x	–	–	–	–	x	03-10E-1	200 hours for B-18 airplanes.
Fuel Pump Coupling	–	–	–	x	–	x	–	–	–	03-10-14	1st Inspection at 50 hours—subsequent inspections at 200 hours.
Fuel Pumps, F-4	–	–	x	–	–	–	–	–	–	03-10EB-1	
Fuel Pumps, Engine Driven, Pesco	–	–	x	x	–	–	–	–	–	03-10EA-1	
Fuel System Unit, Type D-3	–	x	x	–	–	–	–	–	–	03-10A-2	
Injectors, Fuel, Types Q-2 & Q-3	x	–	–	–	–	–	–	–	–	03-10C-1	
Lamp & Signal, Fuel Pressure, C-1 & A-1	x	–	–	–	–	–	–	–	–	03-10F-1	
Liquidometers, Hydraulic	–	–	–	x	–	–	–	–	–	05-65B-1	
Refueling System—B-10, B-10A, B-12 & B-12A	–	–	–	x	–	–	–	–	–	01-35A-14	
Relief Valve, A-2	–	–	x	–	–	–	–	–	–	03-10-2	
Signal Assy., Fuel Pressure, C-3	–	–	–	–	–	–	–	–	x	03-10F-3	See Technical Order.
29 OIL SYSTEM											
Oil Change	–	–	–	–	–	–	–	–	x	06-10-1	
Oil Change—R-1820-53 Series	–	–	–	x	–	–	–	–	–	02-35GA-1A	
Oil Dilution Valve Linkage	–	–	–	x	–	–	–	x	–	03-15-3	
Oil Gages, Cold Weather Operation	x	–	–	–	–	–	–	–	–	05-60-10	
Oil Strainers, Cuno Automatic—R-1820-25, R-1820-39 & Subsequent Models	–	–	x	x	–	–	–	x	–	02-35-49	
Oil Tank Vent Line Installation—BT-9 Series	–	–	–	–	–	–	x	–	–	01-60-24	
30 COOLING SYSTEM											
31 VALVES, MANIFOLDS, SUPERCHARGERS											
Exhaust Collector Ring—0-47A	–	–	■	x	–	–	–	–	–	01-60EA-13	
Exhaust Stacks & Collectors, R-1820-F, -13, -17, -21, -23, -37	–	x	–	–	–	–	–	–	–	02-35F-2	
Push Rods—Installing & Marking	–	–	–	–	–	–	–	–	x	02-1-26	See Technical Order
Rocker Arm Lubrication	–	–	–	–	–	–	–	–	x	06-10-2	See T. O. for applicable inspection periods.
Supercharger Regulator, A-3A	–	x	x	–	–	–	–	–	–	02-1G-2	
Supercharger Regulator, A-7	–	–	–	x	–	–	–	–	–	03-10D-2	
Supercharger—Turbine Driven	–	x	–	x	–	–	–	–	x	03-10DA-2	Lubricate every 10 hours.
Valve Mechanisms	–	–	–	–	–	–	–	x	x	02-1-6	See T. O. for applicable inspection periods.
Valve Spring Upper Washers—R-975 & R-1820 Series	–	–	–	–	–	–	–	x	x	02-35-6	Check clearances at regular valve inspection periods.
32 PROPELLERS AND ACCESSORIES											
Controllable Propellers:											
Curtiss	–	x	–	x	–	–	–	x	–	03-20BA-2	
Hamilton—B-17 & B-18A	–	–	–	x	–	–	–	–	–	03-20CB-5	See Technical Order.
Hamilton—Constant Speed Governor	–	x	–	x	–	–	–	–	–	03-20CA-2	
Hamilton—Hydromatic	–	x	–	x	x	–	–	x	–	03-20CC-2	
Hamilton—2 Position & Constant Speed	–	x	x	x	–	–	–	x	–	03-20CB-2	
Smith	x	–	x	x	–	–	–	x	–	03-20D-1	
Governor Adapter Propeller—A-12	–	–	–	x	–	–	–	–	–	01-25B-14	
Non-Controllable Propellers	x	–	–	x	–	–	–	x	–	03-20A-1	
Overhaul Periods—Propellers	–	–	–	–	–	–	–	x	–	03-20-5	
Propeller Brakes	x	x	–	x	–	–	–	–	–	03-20-7	
Spinner Studs	–	–	–	–	x	–	–	–	–	01-40N-17	
Tightness of Thrust Bearing Nuts	–	–	–	–	–	x	–	–	x	02-1-34	[redacted]

COLUMN NUMBER ON FORM No. 41	PRE-FLIGHT	DAILY	50 HOURS	100 HOURS	200 HOURS	300 HOURS	ENGINE CHANGE	25 Hours After Engine Change	SPECIAL	T. O. NUMBER	REMARKS
33 POWER PLANT—GENERAL											
Ball Bearings—V-1570 Series	–	–	–	–	x	–	–	–	–	02-35E-21	
Cylinder Hold-Down Stud Nut—Radial Engines	–	–	–	–	x	–	–	x	–	02-1-53	[redacted]
Cylinders, R-1690-11 & -21	–	–	x	x	–	–	–	x	–	02-10E-5	
Ground Operation—Engines	x	–	–	–	–	–	–	–	–	02-1-29	
Special Lubrication Requirements—V-1710-17, -35 & -37	–	–	–	x	–	–	–	–	–	02-5A-5	See Technical Order.
Replacement of Distributor Drive Shaft Ball Bearings—V-1710-7 to -41 Inclusive	–	–	–	–	x	–	–	–	–	02-5A-7	
Treatment of Engines for Storage	–	–	–	–	–	–	–	–	x	02-1-1	See T. O. if engine is to remain idle more than one week.
34 COCKPITS AND CABINS											
Safety Belts & Anchorage	–	–	x	–	–	•	–	–	–	03-1-2	
35 NAVIGATION AND FLIGHT INSTRUMENTS											
Accelerometers—B-1	x	–	–	x	–	–	–	–	–	05-20-24	
Airspeed Indicators	–	–	–	x	–	x	–	–	–	05-10-2	
Airspeed Tubes	–	–	–	–	x	x	–	–	–	05-50-1	
Altimeters:											
C-6, C-7, C-8, C-10 & C-11	–	–	–	x	–	–	–	–	–	05-20-10	
D-6 & D-7	–	–	–	x	–	–	–	–	–	05-20-16	
H-1 & Altimeter Assembly, C-5	x	–	x	x	–	–	–	–	–	05-30-1	
Bank & Turn Indicators	–	–	–	x	x	–	–	–	–	05-20-2	
Clocks, A-6, A-7, A-8 & A-9	–	–	–	x	–	–	–	–	–	05-1-9	
Compasses, Magnetic	–	x	–	x	–	x	–	x	–	05-15-2	
Conversion & Use of Pilot's Type Driftmeter as An Attack Bombsight—A-18	–	–	–	x	–	–	–	–	–	01-25AB-6	Lubricate and clean gears and bearings. Also inspect control cables for wear and stretch.
Drift Meters:											
Bausch & Lomb											
B-2	–	–	–	x	–	–	–	–	–	05-25CA-2	
Keuffel & Esser											
B-2	–	–	–	x	–	–	–	–	–	05-25BA-2	
B-3	–	–	–	x	–	–	–	–	x	05-25BB-2	Clean intake screens and air filters every 500 hours.
D-1A	x	–	–	x	–	–	–	–	–	05-25B-2	
Pioneer											
D-1A	x	–	–	x	–	–	–	–	–	05-25A-2	
Flight Indicators (Types C-1, C-3, C-4 & C-5)	–	–	–	x	–	–	–	–	x	05-20-3	Clean intake screens and air filters every 500 hours.
Gage, Pressure De-Icing System	x	–	–	–	–	–	–	–	–	05-1-18	
Gages, Fuel Level—A-17 Series	–	–	–	–	x	–	–	–	–	01-15-21	
Gages, Pressure—Air & Hydraulic	–	–	–	x	–	–	–	–	–	05-1-3	
Gages, Suction—F	–	x	–	–	–	–	–	–	–	05-20-6	
Gages, Fuel Level—P-36A, P-36B, P-36C & XP-40	–	–	–	x	–	–	–	–	–	01-25C-23	
Position Indicators (D-C Selsyn)	–	–	–	x	–	–	–	–	–	05-55A-2	
Power Venturi Tubes	–	–	–	x	–	–	–	–	–	05-50-2	
Rate of Climb Indicators, A-5	x	–	–	x	–	–	–	–	–	05-20-11	
Thermometers	–	–	–	–	–	–	x	–	–	05-1-16	
36 FLIGHT CONTROL MECHANISM											
Automatic Pilot	–	–	–	x	–	–	x	–	–	05-45-2	
Control Cables	–	–	x	–	–	–	–	–	–	01-1-26	
37 FLIGHT CONTROL SURFACES											
38 WINGS											
Internal Drag Brace Rods	–	–	–	x	–	–	–	–	–	01-1-12	
39 WING STRUTS AND BRACING											
Hull Lift Fittings, Front & Rear—OA-8	–	–	–	–	–	x	–	–	–	01-10AA-5	
40 FUEL TANKS											
Auxiliary Tank Supports—C-36 & C-37	–	–	–	x	–	–	–	–	–	01-75-1	
Fuel Tanks—C-32, C-33 & C-34	–	–	–	–	–	–	–	–	x	01-40-15	Inspect at 800 hour intervals.
41 EMPENNAGE											
42 TAIL GEAR											
Air Oil Struts	–	x	–	x	–	–	–	–	–	03-25E-1	
Tail or Nose Wheels—Hayes	–	x	x	x	–	–	–	–	–	03-25A-6	
Tail Wheel Bearings	–	–	–	–	–	–	–	–	x	03-25A-1	Lubricate at 200 hour intervals
Tail Wheels:											
Air Associates	–	x	x	x	–	–	–	–	–	03-25A-5	
Hayes	–	x	x	x	–	–	–	–	–	03-25A-3	
Variety	–	x	x	x	–	–	–	–	–	03-25A-4	
Tires	–	–	–	x	–	–	–	–	–	04-10-2	
43 LANDING GEAR											
Air Oil Struts	–	x	–	x	–	–	–	–	–	03-25E-1	
Landing Gear Retracting Gear—B-10, B-10B, B-12 & B-12A	–	–	–	–	–	–	–	–	x	01-35-1	Inspect at 500 hour intervals.
Shock Absorber Cord	–	–	–	x	–	–	–	–	–	04-5-1	
44 WHEELS AND BRAKES											
Brakes—Hayes	–	–	x	x	x	–	–	–	x	03-25B-2	See Technical Order for 500 hour inspection.
Landing Wheels—Hayes	–	x	x	x	x	–	–	–	–	03-25B-1	
Tires	–	–	–	x	–	–	–	–	–	04-10-2	
Wheels & Brakes:											
Bendix High Pressure	–	x	x	x	x	–	–	–	–	03-25C-1	
Bendix 27" Composite	–	x	x	x	x	–	–	–	–	03-25C-3	
Bendix Streamline	–	x	x	x	–	–	–	–	–	03-25C-2	
45 FUSELAGE, HULL AND FLOATS											
Bulkheads—O-46A	–	–	–	x	–	–	–	–	–	01-40P-21	
Bulkhead Upper Nacelle—B-18 & B-18A	–	–	–	x	–	–	–	–	–	01-40E-96	
Fuselage Skin—C-32, C-33 & C-34	–	–	–	x	–	–	–	–	–	01-40-12	
46 NIGHT FLYING EQUIPMENT											
Flares & Racks	x	–	x	–	–	–	–	–	–	11-15-1	
Flares & Racks	x	–	x	–	–	–	–	–	–	11-15-1B	
47 AIRPLANE—GENERAL											
Accessory Pumps	–	–	–	–	–	–	x	–	–	03-1-4	
Air Compressor Unit (Romec)	–	–	x	–	x	–	–	–	–	03-30B-1	Change oil at 100 hour intervals.
Anti-Icing Equipment:											
Pump—Eclipse	x	–	–	x	–	–	–	–	–	03-35A-1	
Pumps—Pesco	–	–	–	x	–	–	–	–	–	03-35A-3	
Shoes	x	–	x	–	–	–	–	–	–	03-35B-1	
Spinner	x	–	–	–	–	–	–	–	x	03-35A-2	Also treat at completion of day's flying.
Attachable Parachutes:											
Circular	–	–	–	–	–	–	–	–	x	13-5-2	Check at 10 day intervals.
Triangular	–	–	–	–	–	–	–	–	x	13-5-1	Check at 10 day intervals.
CO_2 Cylinders	x	–	–	x	–	–	–	–	x	16-20-2	Check for gas charge at 6 months.
Data Case	x	–	–	–	–	–	–	–	–	00-25-3	Check T. O's in Data Case.
Depot Reconditioning or Inspection	–	x	–	–	–	–	–	–	–	00-25-4	
Fire Extinguishers:											
Carbon Tetrachloride	–	x	–	–	–	–	–	–	x	03-45-1	Check for proper operation each 12 months—Also see T. O. 03-45B-1.
CO_2 (Type A-11, A-12 & A-13)	x	–	–	x	–	–	–	–	–	03-45C-1	
Flotation Gear, Automatic	x	–	–	x	–	–	–	–	–	03-55B-1	
Pumps, Hydraulic:											
Engine Driven (Eclipse)	–	–	–	x	–	–	–	x	–	03-30CA-1	
Hand Operated (Pesco)	–	–	x	–	–	–	–	–	–	03-30CD-1	
Motor Driven (Eclipse)	–	–	–	x	–	–	–	x	–	03-30CA-2	
Pumps, Oil:											
Engine Driven Gear Type (Pesco)	–	–	–	x	x	–	–	x	–	03-30CC-3	
Engine Driven Vane Type (Pesco)	–	–	–	–	x	–	–	x	–	03-30CC-1	1st inspection at 25 hours after new or changed pump.
Motor Driven (Pesco)	–	–	x	–	x	–	–	–	–	03-30CB-1	
Pumps, Vacuum:											
Engine Driven (Pesco)	–	–	–	–	x	–	–	x	–	03-30AA-1	
Radio Data	–	x	–	–	–	–	–	–	–	08-15-2	
Rafts, Pneumatic	–	–	–	–	–	–	–	–	x	03-55A-1	See Technical Order.
Rotor, Autogyro	–	–	–	–	x	–	–	–	–	01-80A-5	
Rubber Vibration Absorbers	–	–	–	–	–	–	x	–	–	01-1-58	
Static Pressure Control Valve	–	–	–	x	–	–	–	–	–	03-1-9	
Valve, Air Distributor, 3 Port (Eclipse)	–	–	–	x	–	–	–	–	–	03-35B-4	

Fig. 17A, Index of Inspection Instructions (Form 41A)

MAINTENANCE INSPECTION RECORD

Form No. 41-B

Organization No. ----------

Station ----------

Organization ----------

---------- (Airplane Model) ---------- (A. C. Serial No.)

---------- (Date purchased) ---------- ---------- (Date of each overhaul) ----------

CREW CHIEF			
Name	Grade	Date Assigned	Date Relieved

ENGINES			ASSISTANTS			
	Left	Right	Name	Grade	Date Assigned	Date Relieved
Model No.						
Serial No.						
Date Installed						
Date of Last Overhaul						
Total time at Last Overhaul						

FUEL CAPACITY:

Main Tanks ---------- Reserve ---------- Auxiliary ----------

OIL CAPACITY ---------- Qt.

(1)

Fig. 17B-1, Maintenance Inspection Record (Form 41B)

ENTER FROM AIRPLANE FLIGHT REPORT

AIRPLANE No. _____

LINE No.	DATE	DEFECTS REPORTED BY PILOT MONTH _____	PILOTS' NAMES
		1	2
1			
2			
3			
4			
5			
6			
7			
8			
9			
10			
11			
12			
13			
14			
15			
16			
17			
18			
19			
20			
21			

(3) 3—10453

Fig. 17B-2, Maintenance Inspection Record (Form 41-B)

Fig. 17B-2. Maintenance Inspection Record (Form 41-B)

ENTER FROM AIRPLANE FLIGHT REPORT AIRPLANE No. _____

LINE No.	DATE	AIRPLANE		ENGINES, TIME SINCE OVERHAUL		TIME OF ACCESSORY EQUIPMENT				OIL, DRAIN EVERY _____ HOURS AND CLEAN STRAINERS				FUEL	INSPECTED TODAY						
		DATE OF LAST FLIGHT	TOTAL HOURS AT LAST OVERHAUL							LEFT		RIGHT			PREFLIGHT INSPECTION	AUXILIARY EQUIPMENT					
		Time today	Time since overhaul	Left	Right					Time since drained	Serviced	Time since drained	Serviced	SERVICED		Bombing	Gunnery	Tow target	Communications	Photography	Oxygen
		3	4	5	6	7	8	9	10	11	12	13	14	15	16	17	18	19	20	21	22
1																					
2																					
3																					
4																					
5																					
6																					
7																					
8																					
9																					
10																					
11																					
12																					
13																					
14																					
15																					
16																					
17																					
18																					
19																					
20																					
21																					

(5) 3—10453

Fig. 17B-3, Maintenance Inspection Record (Form 41B)

DAILY

INSPECT AND MAINTAIN EVERY 25 AND 50 HOURS

AIRPLANE No._____

SPECIAL

LINE No.	DATE	INSPECTED	DATE LAST INSPECTION / 25-HOUR / 50-HOUR / TIME SINCE LAST 50-HOUR INSPECTION	POWER PLANT: Engine Controls L	R	Engine Instruments L	R	Ignition and Electrical L	R	Fuel System L	R	Oil System L	R	Cooling System L	R	Valves, Manifolds, - Supercharger L	R	Propeller and Accessories L	R	General L	R	AIRPLANE: Cockpits and Cabins	Navigation Instruments	Flight Control Mechanism	Flight Control Surfaces	Wings	Wing Struts and Bracing	Fuel Tanks	Empennage	Tail Gear	Landing Gear	Wheels and Brakes	Fuselage, Hull, and Floats	Night Flying Equipment	General	ONCE EACH WEEK: Battery (Enter lowest cell reading)	ENGINE CHANGE
		23	24	25		26		27		28		29		30		31		32		33		34	35	36	37	38	39	40	41	42	43	44	45	46	47	48	49
1																																					
2																																					
3																																					
4																																					
5																																					
6																																					
7																																					
8																																					
9																																					
10																																					
11																																					
12																																					
13																																					
14																																					
15																																					
16																																					
17																																					
18																																					
19																																					
20																																					
21																																					

3—10453

Fig. 17B-4, Maintenance Inspection Record (Form 41B)

Fig. 17B-4. Maintenance Inspection Record (Form 41B)

REMARKS

AIRPLANE No.----------

LINE No.	DATE	
		50-A
1		
2		
3		
4		
5		
6		
7		
8		
9		
10		
11		
12		
13		
14		
15		
16		
17		
18		
19		
20		
21		

MISCELLANEOUS DATA

Explain each defect or trouble detected by inspection.

Explain correction or defects, that is, whether by repairs or replacement of parts or assemblies.

When repairs are not made promptly state cause of delay.

Enter the column number (16 to 49) preceding each remark so as to identify the remark with the column symbol.

Indicate compliance with technical instructions directing mechanical changes.

(9

Fig. 17B-5, Maintenance Inspection Record (Form 41B)

REMARKS

AIRPLANE NO.

LINE No.	
	50-B
1	
2	
3	
4	
5	
6	
7	
8	
9	
10	
11	
12	
13	
14	
15	
16	
17	
18	
19	
20	
21	

MISCELLANEOUS DATA

11)

3—10453

Fig. 17B-6, Maintenance Inspection Record (Form 41B)

AIRPLANE No._____

STATUS TODAY

DO NOT ERASE A STATUS SYMBOL.

IF STATUS CHANGES DURING THE DAY USE NEXT "SYMBOL" COLUMN.

IF SYMBOL IS A RED — OR / THE AIRPLANE WILL NOT BE FLOWN UNLESS AN AIR CORPS OFFICER SIGNS AN EXCEPTIONAL RELEASE HEREUNDER.

LINE No.	DATE	SYMBOL	EXCEPTIONAL RELEASE	SYMBOL	EXCEPTIONAL RELEASE	SYMBOL	EXCEPTIONAL RELEASE	SYMBOL	EXCEPTIONAL RELEASE
		51	52	53	54	55	56	57	58
1									
2									
3									
4									
5									
6									
7									
8									
9									
10									
11									
12									
13									
14									
15									
16									
17									
18									
19									
20									
21									

INSPECTION RECORD

INSPECTIONS OF THIS FORM AT INTERVALS AS DIRECTED BY INSTRUCTIONS WILL BE INDICATED HEREUNDER.

ORGANIZATION				HIGHER AUTHORITIES
FLIGHT CHIEF	INSPECTOR	ENGINEERING OFFICER	COMMANDING OFFICER	
59	60	61	62	63

87.

3—10453

Fig. 17B-7. Maintenance Inspection Record (Form 41B)

is unsafe for flight. This is done to eliminate any possibility of the airplane being inadvertently rolled out for flight.

(d) The repairs made or work done to remedy defects or other unsatisfactory conditions indicated by a red cross will be inspected by the flight chief, the hangar chief, the organization engineering officer or the organization engineering inspector. If the work is found satisfactory by this person, he must indicate that he has inspected the same and found it satisfactory by a signed remark in the "Remarks" column, substantially as follows: Maintenance Work Indicated in Columns _____ Inspected and Found Satisfactory (Name). This is a "Supervisory Inspection" prescribed to insure that the parts are installed correctly, that proper adjustments have been made and that all safeties are in place.

(2) Red diagonal (/)--This symbol indicates the existence of a minor defect, a need for minor maintenance, or some other unsatisfactory condition not serious enough to render the airplane unsafe for flight.

(a) Whenever a defect or other unsatisfactory condition exists in any system, part or assembly of the airplane, not sufficiently serious to render the airplane unsafe or unfit for flight, but of such a nature that it must be corrected before the airplane can be considered to be in first class mechanical condition, a red diagonal must be entered in the column provided for recording the status of the system, part or assembly affected.

(b) Whenever the condition of any system, part or assembly is indicated by a red diagonal, the airplane may be flown, provided it is released for flight by the execution of an "Exceptional Release".

(c) It will not be necessary to enter a red diagonal to indicate an unsatisfactory condition caused by the removal of the parts or assemblies for inspection purposes when this removal is perfectly obvious and the mechanic who removed them remains at work on the airplane. However, if the removal of the parts or assemblies is not perfectly obvious, or the mechanic leaves the immediate vicinity of the airplane, for any reason whatsoever, a red diagonal must be entered in the appropriate column of the form to indicate the existence of an unsatisfactory condition, and that an "Exceptional Release" is required before flight.

(3) Red dash (-)--This symbol indicates "Required Inspection Not Made". It is entered in the appropriate column whenever routine inspections of any system, part or assembly, required by technical instructions, are not accomplished.

(4) Initial--The black last-name initial of the worker certifies "Thoroughly Inspected--condition satisfactory," except that, in the "Preflight Inspection" and "Daily Inspection" columns, the mechanic's initial indicates only that the required inspection was made.

(a) The black last-name initial of the worker placed over a red symbol indicates that the worker has corrected the condition indicated by the red symbol, has inspected the system, part or assembly and finds the

condition to be satisfactory.

(5) Black circle-(0)--The black circle placed around the black last-name initial of the worker indicates "Greased or Oiled". However, when placed around the gravity reading of the battery and the last-name initial of the individual who took the reading, it indicates routine addition of water to the battery. This symbol is not used to indicate the addition of oil to the engine, or for any purpose other than those specified above.

(6) Black dash (-)--The black dash (-) indicates "Inspection Today Not Required by Instructions." It is entered in a column whenever the system, part or assembly covered by the column requires no inspection on the particular day on which the entry is made. However, it will not be necessary to use this symbol to indicate that the 25-hour and 50-hour inspections are not due. The most common use of this symbol will be to indicate that a "Daily Inspection" is not required, if such is the case.

(7) Vertical black line (|)--A vertical black line drawn through a column indicates "Not Applicable". Whenever a system, part or assembly, covered by a column, does not form a part of the aircraft for which the form is maintained, a vertical black line must be drawn through the column. For example, on the form maintained for an aircraft without night flying equipment, a vertical black line will be drawn through the column in which this equipment is listed.

(8) The symbols prescribed above, except the black circle, must also be used for indicating the status of the complete airplane in the "Status Today Section" of the form.

(9) A red symbol must never be placed over an initial. In the event that defects occur or are discovered after the entry of the initial, the initial must be erased before the symbol indicating the existence of the defect is entered, except in the "Status Today" columns.

(10) Symbols, entered on The Maintenance Inspection Record Form by the individual who makes the inspections or performs the work, must represent that individual's opinion as to the condition, defects, etc.; and, therefore, no individual may be directed to change the symbol which he has entered. If the organization engineering or commanding officer believes that the condition is more or less serious than that represented by the symbol, he may change the symbol himself; but he will indicate his action by a signed remark in the "Remarks" column, substantially as follows: Column _____ Symbol Changed From _____ To _____ (Name)." The officer who signs the remark will actually change the symbol himself and assume responsibility for his action.

e. Entries on new forms--(1) Form 41--When starting a new form the following entries must be transcribed from the last previous form:

(a) All identification and data entries at the left of the form.

1. If any data is not available, that fact should be stated.

2. If desired, the names of the mechanics specifically charged with the inspection of auxiliary equipment may be entered under the heading "Remarks".

(b) The month the new form was started must be entered on the line "Month".

(c) Under the heading "Airplane".

1. "Date of Last Flight" (column 3)--Enter the date of the last flight.

2. "Total Hours at Last Overhaul" (Column 4)--Enter the total flying hours of the airplane at the date of overhaul. This information can be obtained from the Form 60A, Technical Instruction Compliance Record, for the airplane.

(d) Under the heading "Time of Accessory Equipment" (column 8)--If the operating time of any particular accessary is being recorded, enter the name of the specific accessory.

(e) Under the heading "Oil - Drain every_____ Hours and clean strainers_____"--Fill in the number of hours at which the oil is to be drained for the particular type of engine or oil system installed.

(f) Under the heading "Inspect and Maintain Every 25 and 50 Hours - Date of Last Inspection"--Enter the date of completion of the last 25-hour and 50-hour inspections.

(g) Under the heading "Remarks - Miscellaneous Data"--Copy whatever miscellaneous data it is desired to bring forward from the old form.

(h) Transcribe on line 1 of the new form every entry from the last line of the previous form.

(2) Form 41-C. When a new form 41-C is started, the following entries must be transcribed from the last previous form:

(a) All identification and data entries at the left of the form.

1. If any data is not available, that fact should be stated.

2. In columns provided for "engine and airplane inspections", enter the airplane hours the next inspection will be due.

3. In columns "Other Hourly Inspections" enter routine inspections due at periods in excess of 400 hours (every 500 hours, 600 hours, etc.). Also enter any added inspection periods not provided for in other columns.

4. In column "T. O. Compliance Record" enter those Technical Orders specifying one time changes and one time inspections ordered but not accomplished. When accomplished, enter date and initial as indi-

cated.

5. Column "Service Test Report" is used for the convenience of maintenance personnel for recording items of equipment undergoing service test on the particular airplane.

(b) The month the new form is started must be entered on the line "Month".

(c) Under the heading "Airplane".

1. Column "Time Today". Enter total time flown today.

2 Column "Total Time". Enter the total time recorded on form 60-A for the airplane.

3. Column "Serviced". Enter quarts of oil serviced each engine as indicated. Enter total gallons of fuel serviced.

(d) Under the heading "Time of Accessory Equipment"--If the operating time of any particular accessory is being recorded, enter the name of the specific accessory and airplane hours installed in space provided above the "Remarks" column.

(e) Under the heading "Oil" - "Drain every____ and clean Strainers". Fill in the applicable notation covering time at which the oil is to be drained for the particular type of engine or oiling system installed.

(f) Under the heading "Inspect and Maintain Every 25 and 50 Hours - Date of Last Inspection".--Enter the date of the completion of the last 25-hour and 50-hour inspections.

(g) Under the heading "Remarks - Miscellaneous Data".--Copy whatever miscellaneous data it is desired to bring forward from the old form.

(h) Transcribe on line 1 of the new form every entry from the last line of the previous form.

f. Identification and data entries--(1) Identification and data entries at the left of the form must be modified or corrected as follows:

(a) When the airplane is received from overhaul or depot reconditioning, the date of last overhaul (and of each previous overhaul) should be recorded, if this has not been done.

(b) When a new engine is installed, the serial number, date installed, date of last overhaul, and flying time at last overhaul will be recorded.

(c) If for any reason, changes are made which effect the fuel and oil capacity of the airplane, change the recorded data accordingly.

(d) When a new crew chief is assigned, or a new additional assistant is assigned, enter his name and grade, and the date assigned. When an assigned man is relieved, do not erase his name, but enter the date of his

relief.

(2) Entries to be made on Form 41 upon receipt of technical instructions directing changes or "one-time" inspections:

(a) When technical instructions are received directing that the work prescribed therein will be performed immediately, a red cross must be entered immediately in the appropriate column. The number of the Technical Order will be recorded in the "Remarks" column.

(b) When technical instructions are received directing that the work prescribed therein will be performed "as soon as possible", a red diagonal must be entered immediately in the appropriate column unless the instructions direct otherwise. In the latter case the symbol must be entered whenever the required work is initiated. When the symbol is entered, the number of the Technical Order must be recorded in the "Remarks" column.

(c) When technical instructions are received requiring work to be performed "as soon as practicable", "when necessary", "at overhaul", etc., it is not necessary to record these by means of the prescribed symbols until the work directed therein is initiated.

g. Horizontal lines--(1) One line across the entire form must be used for each date on which:

(a) The airplane is flown.

(b) The airplane is serviced with fuel or oil.

(c) Inspection or maintenance work is accomplished.

(d) Entries are made in column 50.

(e) An entry is made in the section "Inspection Record".

(2) On the line preceding the first entry for each new month, enter the name of the month in column 1 and make no other entries on that line. The separate months covered by the form will thus be visually indicated by a line that is blank across the entire form, except for the name of the month.

(3) Each time a horizontal line is used for an entry in any column of the form, the current date must be entered on the line used, in the "Date" column to the left of each section of the form. However, at the end of each day, when the status of the airplane is recorded in the "Status Today" section on the next lower horizontal line a date will not be assigned that line until some other entry is made thereon.

(4) A date once entered on any line assigns that line to that date throughout the entire form; insofar as possible all entries for that date will be made on that line, i.e., one line will contain entries for only one date. It will frequently occur that on a specific date an entry will be made on a line in only one column of the form. Therefore, when assigning a line t a date, care must be taken to ascertain that the line to be used is"open" throughout the entire form and has not been used in any section for an entry on a previous date.

(5) Whenever an entry is made on a horizontal line, other than the status entry required to be made at the end of the day on the next lower line, the following additional data must be entered or brought forward from the preceding line:

(a) The status of the daily inspection (not due, due but not made, etc.).

(b) Any uncleared symbols, representing uncorrected defects, unaccomplished maintenance, etc., appearing in any column on the line immediately above.

(c) If not already entered, a symbol indicating the status of the airplane, will be entered in the "Status Today" section.

(6) If the columnar space in such columns as those designated for "Defects Reported by Pilot," "Pilot's Names," "Remarks", etc., is insufficient, the entry may be completed on the next lower line, in which case the two lines will be bracketed to indicate they both pertain to the same date.

h. Data to be transcribed from the "Airplane Flight Reports"--(1) Form 1A--As soon as possible after the complete "Airplane Flight Report"-Engineering is available to the crew chief, he must copy all pertinent data in the appropriate sections of Form 41.

(a) Column 1, "Defects Reported by Pilot"--Copy the pilot's remarks relative to unsatisfactory condition or functioning of the aircraft or its accessories.

(b) Column 3, "Airplane Time Today"--Enter the total flying time for the day in hours and minutes.

(c) Columns 10, 12 and 14, "Oil Serviced"--Enter the quantity of oil serviced to each engine.

(d) Column 15, "Fuel Serviced"--Enter the quantity of fuel serviced to the airplane.

(e) Column 16, "Pre-flight Inspection"--Copy the last-name initial of the mechanic who made the pre-flight inspection. In the event that the pre-flight inspection was not made and the red dash, symbol for "Required Inspection Not Made," is entered in the column "Date of or Hours Due" copy the red dash symbol in lieu of the mechanic's last-name initial.

(f) Columns 17 to 22, inclusive, "Auxiliary Equipment,"--Copy the symbol representing the status of auxiliary equipment in the appropriate column of this group.

(g) Column 23, "Daily"--The status of accomplishment and the results of the daily inspection are normally entered directly on Form 41 and transcribed to the Airplane Flight Report, Form 1A. However, in the event that the original entry for the daily inspection is made on the latter form, e.g., when the airplane is absent from the home station, copy the last-name

initial of the individual who made the inspection in this column, or the black or red dash in case the inspection was not due or though due, was not made. Symbols indicating the results of inspection or work done during the inspection must not be entered in this column, but must be entered instead in the appropriate column of the group of columns 25 to 49.

(h) Columns 25 to 48, inclusive, "Inspect and Maintain Every 25 and 50 Hours"--In the event the Form 1A shows that defects were detected or maintenance work was found necessary while the airplane was "on the line" or absent from the hangar, the proper symbols for recording such defects or maintenance work will be entered in the appropriate columns of this group of columns.

(i) Column 50, "Remarks"--Copy any remarks appearing in the section "Instructions For Pilots and Mechanics" explaining any defects, recording maintenance work done while on the line, while away from the home station, etc.; and any instructions of the pilot relative to the accomplishment or omission of inspections or maintenance work. If the airplane was flown under an "exceptional release", originally recorded on the Form 1A, record the name of the individual who signed the release by a remark substantially as follows: "Exceptional Release Signed on Form 1A by (Name)".

(j) Columns 52 to 58, inclusive, "Status Today"--The status of the airplane is normally recorded on Form 41 and transcribed to the Form 1A. In the event, however, that the status was originally indicated on the Form 1A, the status symbols will be copied to the Form 41. Any changes in the status during the day, that were originally recorded on the Form 1A, must likewise be transcribed to Form 41.

(k) When Form 41B is used instead of Form 41, the data must be copied from Form 1A to Form 41B in the manner prescribed for copying to the Form 41. At the end of the period during which Form 41B is used, complete data from the last date of entry must be copied to Form 41. Notation must be made on Form 41 on the line preceding this entry to the effect that the data for the period since the last recorded entry is contained in Form 41B.

(2) Form 1--Column 2, "Pilot's Names"--Copy the names of the pilots who flew the airplane on the particular day, in the order shown on the "Airplane Flight Report" - Operations.

i. Defects reported by pilots, and pilot's names (columns 1 and 2)--These columns are provided for recording any defects noted by pilots and the names of the pilots who fly the airplane. Data is transcribed to these columns in accordance with the instructions included in sub-paragraph h.

j. Time today--(column 3)--Enter the total flying time of the airplane for the calendar day, regardless of the number of flights.

k. Time since overhaul, and time of accessory equipment (columns 4 to 8)--The flying time for each day, as shown by the entry in column 3, must be added to the last previous totals in these columns and the sums entered in the proper columns on the same date line used for the time entry in column 3. Thus, the various time figures in these columns will represent the total

flying time at the end of the day's flying.

l. Oil--(columns 9 to 14)--(1) Time since drained (columns 9, 11 and 13)--The flying time for each day, as shown by the entry in column 3, must be added to the last previous totals in these columns and the sums entered in the proper columns on the same date line used for the time entry in column 3. When the oil is drained, a heavy black line will be drawn under the "Time Since Drained" figures. The computation of "Time Since Drained" must start at zero each time the oil is drained from the engine.

(2) "Serviced" (columns 10, 12, 14)--Enter the quantity of oil, in quarts, serviced to the engine during the day in the column provided for recording the oil serviced to the engine. This entry will normally be copied from the Airplane Flight Report, Form 1A.

m. Fuel "Serviced" (column 15)--Enter the quantity of fuel, in gallons, serviced to the airplane during the day. This entry normally must also be transcribed from the Airplane Flight Report, Form 1A.

n. Inspected today (columns 16 to 22)--(1) Pre-flight inspection, column 16. The accomplishment or non-accomplishment of the pre-flight inspection normally will be recorded directly on the Airplane Flight Report, Form 1A, by the entry of the date concerned and the last-name initial of the mechanic who made the inspection, or, if not made, by the entry of a red dash, symbol for "Required Inspection Not Made". These entries record merely the accomplishment or non-accomplishment of the inspections and not the results. The last-name initial of the mechanic who made the pre-flight inspection or, in the event that no pre-flight inspection was made, the red dash symbol indicating "Required Inspection Not Made", must be copied in this column from the "Airplane Flight Report, Form 1A".

(2) Auxiliary equipment, (columns 17 to 22).

(a) Bombing - column 17.

(b) Gunnery - column 18.

(c) Two targets - column 19.

(d) Communications - column 20.

(e) Photographic - column 21.

(f) Oxygen - column 22.

Responsibility for making the prescribed operating and maintenance inspections of auxiliary equipment rests with the specialists charged with the maintenance of such equipment. The results of the daily operating inspection of auxiliary equipment is entered directly on the "Airplane Flight Report, Form 1A" by the specialist making the inspection and is then transcribed to Form 41 by the crew chief, as prescribed in sub-paragraph i.

o. Daily - inspected, (column 23)--(1) Whenever a daily inspection of the airplane is completed, the mechanic who made the inspection must enter his last-name initial in this column, regardless of the results of the in-

spection.

(2) If, during the inspection, it is found that defects exist or that maintenance work is required, the appropriate symbol to indicate such defects or required maintenance work must be entered in one or more columns of the group of columns titled "Inspect and Maintain Every 25 and 50 Hours".

(3) If a daily inspection is not required, a black dash, symbol for "Inspection Today Not Required", must be entered here, with the exception that a line will not be used solely for this purpose as discussed below in sub-paragraph n (6).

(4) If, though required by existing instructions, the daily inspection is not made, the red dash, symbol for "Required Inspection Not Made", will be entered here, with the exception that a line must not be used sdely for this purpose as discussed below in sub-paragraph n (6).

(5) The entry in this column does not record the results of the inspection. It merely records that a daily inspection has been made; that a daily inspection is not required or that a daily inspection, though required, has not been made.

(6) The black dash, symbol for"Inspection Not Required Today," or the red dash, symbol for "Required Inspection Not Made", must not be entered in this column unless there are other entries on the line in some other section, excluding the status symbol entered at the end of the day in one of the "Symbol" columns in the group of columns titled "Status Today".

(7) In accordance with the previous instructions relative to the entry of dates, the date of any entry in this column will be entered on the same horizontal line in the date column immediately to the left.

p. Time since last 50-hour inspection (column 24)--(1) The flying time for the day, as shown in column 3, will be added to the time shown by the last preceding entry and the sum entered in this column.

(2) When a 25-hour inspection has been completed, the time figures in this column must be underscored in black.

(3) When a 50-hour inspection has been completed, the time figures in this column must be underscored in black, the time "dropped", and the time entries again started at zero. Between each 50-hour inspection there normally will be one 25-hour inspection and, as the 25-hour inspection is a part of the 50-hour inspection, all items listed for the 25-hour inspection must be inspected twice each 50-hours.

(4) The calculation of flying time for making the 50-hour inspection will always start at zero after the completion of the last previous 50-hour inspection. Thus, if an airplane returning from a flight has accumulated, for example, 50 or 60 hours, all the accumulated time must be dropped when the 50-hour inspection is completed and the computation to determine the time of the next 50-hour inspection will start at zero. However, if, for any reason, after the completion of the flight, the required 50-hour inspection is

not completed and the airplane is flown on an "Exceptional Release", the flying time accruing until the completion of the 50-hour inspection must be added to that already accrued. The red dash symbols must be entered in the appropriate columns until the inspections which are due have been completed.

(5) If, when the 25-hour or 50-hour inspections are due, they are partially made but not completed, these instructions will govern:

(a) Enter a red dash, symbol for "Required Inspection Not Made", in the columns devoted to the parts or systems that complete the inspection.

(b) The flying time in column 24 must not be underscored to indicate that the inspection has been made until the inspection due has been completed, even though the airplane flew under an "Exceptional Release" in the meantime.

(c) The "Exceptional Release" must be granted and properly recorded if the airplane is flown without the required inspections having been completed.

q. Inspect and maintain every 25 and 50 hours (columns 25 to 47)--(1) Columns 25 to 47 are used to indicate the status or condition of the various parts or assemblies of the airplane and engines indicated by the column headings.

(2) Each column in the section "Power Plant" is divided into two sections, headed "L" (left) and "R" (right). This is done to provide a method of separately indicating the status and condition of each engine in bi-motored aircraft. When the forms are used in connection with single-engined aircraft, all entries will be made in the sections headed "L".

(3) If the airplane is flown on the same day that a 25-hour or a 50-hour inspection is completed after the completion of the inspection, the succeeding line will be used to make the entries on the Form 41 required by the flight.

r."Special"--(1) Column "Once Each Week"-"Battery". (a) Maintenance and inspection data pertaining to the airplane batteries will be recorded in this column. When the airplane electrical system includes two batteries, data relative to both batteries may be recorded on the same date line by entering those pertaining to the left battery in the upper part of the available space and those pertaining to the right battery in the lower part. If desired, the entries for the left battery may be preceded by the letter "L" and those for the right battery by the letter "R".

(b) When water is added to the battery during inspection, the black circle must be placed around the last-name initial of the mechanic who added the water. If, at the same time water is added, the gravity of the battery is read, include the gravity reading of the lowest cell of the battery in the circle with the last-name initial of the mechanic.

(2) "Engine Change" column--(a) When an airplane is placed "out of

commission" for the purpose of engine change, enter a red cross "X" in this column. This symbol will be considered sufficient indication that the airplane is unfit for flight and it will, therefore, not be necessary to place additional red "X's" in other columns of this section. The red "X" will, of course, be carried forward to the "Status Today" Section.

(b) Upon completion of the engine change operation, including completion of any special inspections and maintenance work prescribed to be accomplished at engine change and the inspection of the work performed in connection with the engine change, the red cross will be cleared in the prescribed manner by placing the last-name initial of the mechanic over the red cross symbol.

s. Remarks--(1) Whenever a symbol appears in any column of the two groups of columns titled "Inspect And Maintain Every 25 and 50 Hours" and "Special" indicating a dangerous condition, a defect, that maintenance work is required or that maintenance work has been accomplished; the specific condition, defect, repairs, replacement, adjustment, maintenance work, etc., indicated by the symbol, must be explained by a remark in this column. Each of these remarks must be preceded by the column number to which it pertains.

(2) Suitable remarks must also be entered to:

(a) Explain the symbols used to record the accomplishment of one-time changes, modifications, inspections, etc., which are directed by Technical Orders.

(b) Record any maintenance delays caused by lack of spare parts or supplies.

(c) Record any other data not specifically assigned to another section, which the Engineering Officer of the organization or unit desires to be entered on this form.

(3) Whenever technical instructions, requiring non-periodic inspections or changes to equipment which are to be accomplished locally, are complied with; the symbol recording the work must be explained by a remark substantially as follows: "Technical Order Number complied with."

(4) Whenever a defect reported by a pilot cannot be located or appears to have been reported in error, an appropriate remark will be entered to that effect and the fact that corrective action cannot be taken must be reported to the Engineering Officer.

(5) Whenever the initial of a mechanic not listed in the heading of the form appears in any column, his name and grade will be entered in the "Remarks" column, substantially as follows: "(Daily Inspection) (25-hour Inspection) (Inspection of Columns _____ _____ _____ and _____ _____ _____) made by (name and grade)," to identify the individual represented by the initial.

(6) Whenever an individual conducts the inspection of accomplished work required by sub-paragraph d (1) (d) he must record such inspection in this column.

(7) Whenever an individual changes a symbol in accordance with sub-paragraph d (10) he must record his action in this column.

(8) Whenever an airplane is involved in an accident or a forced landing, a suitable entry will be made in the "Remarks" column. Such remarks must be brief but should include the causes, if known, and the extent of the damage. Likewise, if the airplane is nosed up or an installed propeller is seriously damaged, a brief record of the occurrence must be entered.

(9) When the airplane is dropped from property records on a report of survey, an appropriate entry will be made in the "Remarks" section, showing the reason and the authority for the survey. Disposition of the Form 41 in this case is discussed in paragraph w (3).

(10) The "Remarks" column has been divided into two sections, "A" and "B", to enable engineering personnel who desire to do so to segregate various types of remarks. For example, some engineering officers prefer that remarks pertaining to replacement and repairs be segregated from the rest. If desired, all such remarks may be entered in Section 50A, while remarks pertaining to subjects other than repairs or replacements, may be entered in the Section 50B. However, this special segregation is not mandatory, and the column may be used as one continuous column, ignoring the sub-division.

t. Miscellaneous data--In the heading of the "Remarks" column are two groups of lines headed "Miscellaneous Data". They are provided for recording semi-permanent data, such as the date the compasses were last swung; the date safety belts were last tested; the aircraft hours and date at which specific items of equipment or accessories, such as controllable propellers were installed; and the date and the aircraft hours at which they were removed, etc. These groups of lines are provided for the convenience of local authority to be used as desired and their use is not mandatory.

u. Status today (columns 51 to 58)--These columns are used to indicate the status of the complete airplane with reference to its mechanical condition, completion of prescribed inspections, etc., and to record "Exceptional Releases" granted. Entries must be made in accordance with the following instructions:

(1) The status of the complete airplane must be indicated in the "Status Today" symbol columns by means of the symbols prescribed in sub-paragraph d. The symbol entered will be that which represents the most serious omission or defect recorded in column 23 and in columns 25 to 49.

(a) When making inspections of aircraft and recording the results in the appropriate columns, it will not be necessary to enter a status symbol in the "Status Today" section until the inspection is completed or until the mechanic making the inspection discontinues the inspection or leaves the immediate vicinity of the airplane for any reason.

(b) When minor defects are discovered and immediately corrected, and the symbol showing the defect and the initial showing correction are entered on the form at the same time, it will not be necessary to carry forward to the "Status Today" section the red diagonal indicating such minor defect.

(2) A status symbol, once entered in a "Status Today" symbol column, must not be "initialed over", erased, or changed. Changes in the status of the aircraft during the day must be recorded in the next open symbol column to the right. In the event that more than three symbol columns are required to show the changes in status during any one day, the symbol columns on the next lower line must be used and the two lines so used for one day will be bracketed together and dated in the manner outlined in subparagraph g (3).

(3) When the status of the airplane is indicated in the "Status Today" Symbol columns by a red cross, the airplane must not be flown, nor may anyone authorize or direct that it be flown until the dangerous defect or condition indicated by the red cross symbol is eliminated or corrected.

(4) When the status of the airplane is indicated in the "Status Today" Symbol columns by a red diagonal or red dash, the airplane may not be flown unless released for flight on an "Exceptional Release", in accordance with the following instructions:

(a) Whenever possible this permission should be granted by the squadron engineering officer to insure that he has direct knowledge of the fact that aircraft under his jurisdiction are being flown under an "Exceptional Release". However, an "Exceptional Release" may be granted by any Air Corps Officer, warrant officer or enlisted rated pilot authorized to do so by his Commanding Officer.

(b) The Engineering Officer who grants an "Exceptional Release" assumes full responsibility for the mechanical safety of the airplane in flight. The fact that he grants such an "Exceptional Release" and records his action by his signature in the place provided is considered a certificate to the effect that he considers the airplane safe for flight and that he has made sufficient inspection to justify his opinion.

(c) An "Exceptional Release" once granted by a squadron, flight or aircraft Engineering Officer, is effective for the calendar day unless additional defects are detected. An "Exceptional Release" granted by a pilot is effective only as long as that individual is functioning as pilot or co-pilot and the pilots on subsequent flights during the calendar day must also sign or initial the "Exceptional Release".

(d) When practicable, the "Exceptional Release" must be recorded by a signature directly on the Form 41. When so recorded, a remark substantially as follows must be entered in the "Exceptional Release" column of the "Airplane Flight Report, Form 1A"; "Exceptional Release Signed on Form Number 41."

v. Inspection record (columns 59 to 63)--Inspections by supervisory maintenance personnel must be made in accordance with the following instructions:

(1) Column 59, "Flight Chief"--Each working day on which maintenance entries are recorded on the Maintenance-Inspection Record, the Flight Chief must make such inspection of the aircraft and its record as may be necessary to insure himself that the required inspections and maintenance work have been

accomplished and that the required entries have been made on Form 41. He must initial this column on each such working day to record his inspections.

(2) Column 60, "Inspector"--At least once each fifteen days, preferably coincident with a regular 25-hour or 50-hour airplane inspection, the organization inspector must inspect the airplane and its Maintenance-Inspection Record in sufficient detail to determine the condition of the airplane and the accuracy of the entries on the Maintenance-Inspection Record Form. He will initial this column to record this inspection upon its completion.

(3) Column "Organization Engineering Officer"--At least once each thirty days, the organization engineering officer must inspect each airplane and its Maintenance-Inspection Record to determine the condition of the airplane, the manner in which routine inspection and maintenance work have been accomplished, the accuracy of the entries on the "Maintenance-Inspection Record" and the manner in which maintenance and subordinate supervisory personnel have performed their duties. He must enter his initial in this column to indicate completion of the inspection.

(4) Column "Commanding Officer"--At least once each thirty days, the organization commander must inspect each airplane and its Maintenance-Inspection Record in sufficient detail to familiarize himself with the condition of the aircraft; the accuracy of the "Maintenance-Inspection Record" and the manner in which maintenance and subordinate supervisory personnel have performed their duties. He must enter his initial in this column to indicate completion of the inspection.

(5) Column, "Higher Authorities"--Whenever the airplane or the Maintenance-Inspection Record is inspected by higher commanders or their representatives, the individual making the inspection must enter his initial or sign his name in this column to record the completion of such inspection.

w. Disposition of form--(1) When an airplane is transferred to another organization of activity, its current Form 41 or Form 41C, as applicable must be forwarded to the new activity on the date the transfer is effected. When the transfer is made by air, the form must accompany the airplane.

(2) Only the last previous Form 41 or Form 41C will be maintained in the files of the organization for reference and the information of the inspection officers. All others may be destroyed, provided they have been inspected by a representative of the Inspection Division, Office of the Chief of the Air Corps.

(3) The Form 41's or Form 41C's maintained for aircraft dropped from the property records must be retained until inspected by a representative of the Inspection Division, Office of the Chief of the Air Corps, after which they may be destroyed.

25. Armament Inspection Record (A. C. Form 43)--a. Types of Inspection--For purposes of technical inspection, armament equipment is considered as pertaining to a specific aircraft if it is installed on the aircraft or is assigned to the aircraft and available in such condition that it can be immediately attached without appreciable loss of time. Armament materiel on hand within an organization which does not pertain to a specific

aircraft consists of all armament equipment not included above even though it is assigned to a specific aircraft but, as in the case of fixed guns, is equipment which would take an appreciable amount of time for installation. This equipment is cleaned and inspected at least once each month to determine whether or not it is in serviceable condition. All items found to be unserviceable must be tagged with a red tag showing the date of inspection and nature of defect and suitable steps taken to dispose of the property or render it serviceable. Technical inspections of aircraft armament pertaining to a specific aircraft are recorded on Air Corps Form No. 43, which is illustrated in Figure 18. These inspections consist of two types: operating and maintenance. Operating inspections are known as Job No. 1, while maintenance inspections are known as Job No. 2.

(1) Operating inspections are designed to determine whether the armament equipment is in usable condition and are performed each day the aircraft is flown, immediately before the first flight. In no case is more than one week allowed to lapse between operating inspections unless the aircraft is in "Storage Status". The results of this inspection must be recorded on Form 43 and the status symbol entered in appropriate locations on Air Corps Form No. 1A under the heading "Inspection of Auxiliary Equipment".

(2) Maintenance inspections are made of equipment pertaining to each aircraft every forty aircraft flying hours regardless of whether or not the equipment has been used during this period. Insofar as possible the armament maintenance inspection should be performed at the same time that the 50-hour maintenance inspection is performed upon the aircraft and in no case must more than one month be allowed to lapse between 50-hour armament maintenance inspections regardless of whether or not the aircraft is flown, unless the aircraft is in "Storage Status". The results of maintenance inspections are recorded on the Armament Inspection Record.

(3) The inspection periods prescribed herein will govern unless shorter periods are prescribed by technical publications relating to the specific item of armament equipment.

b. Function of the inspection record--The various functions of the Armament Inspection Record may be outlined as follows:

(1) To serve as a guide to armorers.

(2) To fix responsibility for the proper performance of inspection and maintenance.

(3) To provide an up-to-date visual record ofmaintenance of the armament equipment pertaining to each aircraft.

(4) To enable inspection and other responsible personnel to quickly determine the installation and maintenance status of armament equipment pertaining to each aircraft.

c. Preparation and entries--An Armament Inspection Record must be initiated

WAR DEPARTMENT
AIR CORPS
Form No. 43
(Revised Dec. 22, 1936)

ARMAMENT INSPECTION RECORD

SQUADRON
AIRPLANE No. _____
AIRPLANE
TYPE AND A. C. No. _____

STATION _____ ARMORER _____
ORGANIZATION _____ ASSISTANT _____ MONTH _____

Date	Job Number	Guns		Gun Mounts		Gun Controls		Synchronizers			Sights		Racks and Shackles		Rack Controls		Chemical Equip.		Accessory Equipment		
		Fixed	Flexible	Fixed	Flexible	Fixed	Flexible	Generator	Impulse Assembly	Trigger Motor	Gun	Bomb	Internal Bomb	External Bomb	Internal Bomb	External Bomb	Tank	Shackles and Controls	Gun Camera	Tow Target Mechanism	Bomb Hoists
	1	2	3	4	5	6	7	8	9	10	11	12	13	14	15	16	17	18	19	20	21
1																					
2																					
3																					
4																					
5																					
6																					
7																					
8																					
9																					
10																					
11																					
12																					
13																					
14																					
15																					
16																					
17																					
18																					
19																					
20																					
21																					
22																					
23																					
24																					
25																					
26																					
27																					
28																					
29																					
30																					
31																					

SYMBOLS

Last name initial of the armorer, in black, indicates: Inspected and found satisfactory.
Black dash (—) through one or more columns indicates: Inspection not required.
Black vertical line (|) down a column indicates: This column not applicable to this aircraft.
Red dash (—) through one or more columns indicates: Inspection required but not made.
Red diagonal (/) indicates: Maintenance work found necessary; or that the item of equipment was not installed and was not immediately available for attachment.
Red cross (X) indicates: Condition of this item renders the aircraft dangerous for a flight of any kind. This symbol grounds the aircraft.

EXPLAIN EACH RED SYMBOL IN DETAIL HEREUNDER:

REMARKS

22

3—9228

Fig. 18a. Armament Inspection Record (Form 43) (Face)

		AMMUNITION RECORD															INSPECTED BY—		
		Bombs			Chemicals		Guns								Pyrotechnics				
Date	Remarks	Type	Size	Amount	Type	Amount									Type	Amount	Chief Armorer	Crew Chief	Armament Officer
	22	23	24	25	26	27	28	29	30	31	32	33	34	35	36	37	38	39	40
1																			
2																			
3																			
4																			
5																			
6																			
7																			
8																			
9																			
10																			
11																			
12																			
13																			
14																			
15																			
16																			
17																			
18																			
19																			
20																			
21																			
22																			
23																			
24																			
25																			
26																			
27																			
28																			
29																			
30																			
31																			

Fig. 18b. Armament Inspection Record (Form 43) (Back)

GPO 3—9228

and maintained in all tactical organizations for each aircraft on which armament is standard equipment. In non-tactical units or activities, armament records must be initiated and maintained during the periods the aircraft are provided with armament equipment.

(1) Entries on the front of the form are made on the current date line as follows:

(a) The result of the inspection or omission of any inspection is recorded in the respective columns using the following symbols:

1. The last-name initial of the armorer, in black, indicates that the item of equipment was inspected as prescribed and found satisfactory.

2. A black dash (-) through a column or line across the page, in columns 2 to 21, inclusive, indicates that the inspection was not required.

3. A red dash (-) through a column or a red line across several adjacent columns indicates that an inspection was required but not made.

4. A red diagonal (/) in any column indicates that maintenance work was necessary, or that the item of equipment was not installed nor was it immediately available for attachment. Each red diagonal must be explained in the "Remarks" column. The red diagonal once explained need not be explained again until the condition or defect is corrected. However, the red diagonal must be entered in the appropriate column at the time of each inspection and the symbol and explanation entered daily on Form 1A, until the condition is corrected.

5. A red cross (X) indicates that the condition of the armament equipment renders the aircraft dangerous for a flight of any kind. This symbol grounds the aircraft and it must not be flown until the dangerous condition has been corrected. It should seldom be necessary to use this symbol in connection with armament as the mere fact that some piece of armament is inoperative need not necessarily render flight dangerous.

6. A black vertical line (|) drawn through a column indicates that this column is not applicable to the aircraft.

(b) When any condition indicated by a red symbol is corrected, the armorer's last name initial, in black, must be entered over the red symbol on the date the defect was corrected.

(c) The armorer must not only be thorough in his inspection but absolutely accurate in the use and entering of symbols, as full responsibility is assumed by him when his initials or other status symbols are placed on the record.

(d) A red symbol is never placed over a black symbol. In the event that a defect occurs or is discovered after the entry of a black symbol, the black symbol must be erased before the red symbol is entered.

(e) Column 22, in addition to being used to explain any red symbol, should also be used for recording any pertinent facts not covered elsewhere.

(2) Entries on the reverse of the form are made as follows:

(a) A record of the bombs and chemicals expanded is entered in columns 23 to 27 inclusive.

(b) In the blank spaces under "Guns" at the head of columns 28 to 35 inclusive the gun position, caliber and serial number of the unit is entered. For this purpose the abbreviations flex. and fix. are used for flexible and fixed guns. The following is an example in the use of these columns:

1. Example: On a PB-2 airplane, column 28 would be headed "Flex 1-30-2967", column 29 would be headed "Fix 1-30-2968", column 30 would be headed "Fix 2-50-2969". The number designation of the gun position is as prescribed by squadron, group or higher commanders but the designations must be uniform within the organization. On the appropriate line under these columns is entered the amount of ammunition expended.

(c) Columns 36 and 37 must show on the appropriate date line, the type and amount of pyrotechnics expended.

(d) Column 38 is initialed by the chief armorer upon the completion of each Job No. 2 inspection or upon the completion of any armament maintenance work indicating that the work has been satisfactorily accomplished. In any event the chief armorer initials this column at least once each week indicating that he has checked this form and found it satisfactory.

(e) Column 39 is initialed by the crew chief of the aircraft upon the completion of any armament maintenance work indicating that the work accomplished by the armorer has not in any way affected the airworthiness of the aircraft. It is the responsibility of the armorer to report to the crew chief when the maintenance work is completed and obtain the crew chief's initials on this form.

(f) Column 40 is initialed by the organization Armament Officer at least once each fifteen days indicating that the form and equipment are satisfactory or that he has taken proper action to correct any unsatisfactory condition.

(3) Miscellaneous requirements concerning the armament record--
(a) When aircraft on which armament equipment is installed leaves its base on any mission which requires operation from a temporary base the Armament Inspection Record must accompany the aircraft and it is the responsibility of the commander of the aircraft to have the Armament Inspection Record properly maintained while the aircraft is absent from its home base.

(b) During the time that an aircraft is temporarily transferred to the local engineering department for repair, modification, etc., the

form must be retained in the organization to which the aircraft is assigned.

(c) When an aircraft, which has armament equipment, is transferred from an organization, the Armament Inspection Record must accompany the aircraft.

(d) A new Armament Inspection Record must be initiated upon the first working day of each month and completed forms retained within the organization for a period of one year, after which they may be destroyed.

26. Radio Inspection And Maintenance Record (A. C. Form 44)--a. Types of inspections--Radio inspection is divided into two classes; Operating and Maintenance, each of which is outlined in subsequent paragraphs.

(1) The purpose of the operating inspection is to determine whether the aircraft communications equipment is in satisfactory operating condition. It should be made as comprehensive as possible in the time allowed and must be performed at the following periods:

(a) Once daily, after the airplane has been initially warmed up prior to take-off.

(b) Immediately following the initial installation of communications equipment.

(c) After any repairs or changes have been made in the radio installation or accessories.

(2) The purpose of the Maintenance Inspection is to determine the extent of wear and tear incident to service use, the exact condition of the installation, and the maintenance work necessary to place the equipment in first class condition.

(a) Maintenance inspections must be made according to the following schedule: After every 50 aircraft flying hours, or every 30 days, depending on whichever comes first, regardless of whether or not the equipment has been used during this period. An exception to this rule should be made during periods of intensive use, such as communications exercises, maneuvers, etc., and in such cases the maintenance inspection accomplished after each 25 aircraft flying hours.

b. Functions of the Radio Inspection and Maintenance Record--The results of the maintenance inspections must be recorded on the Radio Inspection and Maintenance Record. This record is illustrated in figure 19 andits functions may be outlined as follows:

(1) To serve as a guide to radio mechanics.

(2) To fix the responsibility for the proper performance of inspection and maintenance.

(3) To provide an up-to-date visual record of the condition of maintenance of the radio equipment on each aircraft.

WAR DEPARTMENT
AIR CORPS
Form No. 44
Revised July 22, 1937

RADIO INSPECTION AND MAINTENANCE RECORD

AIRCRAFT TYPE _____ A. C. No. _____ SQUADRON NO. _____

ORGANIZATION _____ STATION _____

DATE	DATE OF LAST INSPECTION ——— AIRPLANE TIME	BONDING AND SHIELDING	COMMAND SET Type _____								LIAISON SET Type _____								RADIO COMPASS Type _____							MB RECEPTOR Type _____							INTERPHONE Type _____			
			POWER UNITS	TRANSMITTER UNITS	RECEIVING UNITS	JUNCTION BOX	ANTENNAE	MICROPHONES	CORDS AND PLUGS		POWER UNITS	TRANSMITTER UNITS	RECEIVING UNITS	JUNCTION BOX	ANTENNAE	MICROPHONES	CORDS AND PLUGS		POWER UNITS	RECEIVING UNITS	ANTENNAE	MODULATOR UNITS	CONTROL BOX	CORDS AND PLUGS		SET BOX	JUNCTION BOX	BATTERIES	INDICATOR	ANTENNAE	CORDS AND PLUGS		INTERPHONE UNITS	CORDS AND PLUGS	MICROPHONES	
1	2	3	4	5	6	7	8	9	10	11	12	13	14	15	16	17	18	19	20	21	22	23	24	25	26	27	28	29	30	31	32	33	34	35	36	37

★ When departing on extended cross-country trip fold and insert in rear of book of Forms 41-B.

108

Fig. 19a. Radio Inspection And Maintenance Record (Form 44) (Face)

N. C. O. IN CHARGE _____ RANK _____

_____ _____

ASSISTANT _____ RANK _____

_____ _____

INSPECTION RECORD					REMARKS
STATUS—CONDITION	N. C. O. IN CHARGE	CREW CHIEF	COMMUNICATIONS OFF.	HIGHER AUTHORITIES	ENTER REMARKS ON PROPER DATE LINE IN THE FOLLOWING ORDER: 1—Enter the Column Number to which the Remark Refers. 2—Explain Each Defect or Trouble Found. 3—Explain Correction, as "Repaired", "Replaced", Etc. 4—When not Promptly Corrected State Cause of Delay. 5—Indicate Compliance with Technical Instructions Directing Mechanical Changes. 6—Other Pertinent Remarks.
38	39	40	41	42	43

Fig. 19b. Radio Inspection And Maintenance Record (Form 44) (Back)

(4) To enable responsible and inspecting officers to quickly determine the status of radio installations on each aircraft and the standard of maintenance of installed radio equipment.

c. Preparation and entries--The record must be initiated and maintained in all tactical organizations for aircraft on which radio installations are standard equipment. In school squadrons, service squadrons and similar non-tactical organizations, radio inspection records need be initiated and maintained only during periods that aircraft are provided with radio equipment.

(1) Entries on the form must be made as follows:

(a) Under the heading and on the proper line, insert the required information.

(b) The date of entry is indicated under the column headed "Date", to include the year and month.

(c) The maintenance inspection of items enumerated at the head of columns 3 to 37, inclusive, must be performed in accordance with instructions contained in Technical Orders and all equipment must be thoroughly cleaned at this inspection. The result of the inspection or the omission of any inspection must be recorded in the respective columns, using the symbols prescribed for Form 41.

(d) Under "Remarks" enter any pertinent explanation relative to the operations, installations, maintenance, etc., of the radio equipment. If space allotted for remarks proves insufficient, additional blank sheets of paper may be attached to complete the explanation.

(e) Under the section "Inspection Record", columns 40, 41 and 42, the individuals indicated must initial the respective columns as prescribed below:

1. The chief radio mechanic responsible for the installation and maintenance of the radio equipment must initial column 39 each time work has been performed or the equipment status has changed. He must also place the prescribed symbol in column 38.

2. The crew or line chief responsible for the maintenance of the aircraft must initial column 40 whenever the radio mechanic has performed work on installed equipment, to indicate that such work did not affect the safety of the aircraft or engine.

3. The Communications Officer must inspect radio installations at least every fifteen days to assure himself that the equipment is in working order and its condition is as indicated on the form. These inspections must be recorded by his initial in column 41. The date on which he initials the form should be entered in small figures with the initials.

(2) When aircraft which have radio equipment installed are taken on extended cross-country missions, during which the equipment is operated, the Radio Inspection and Maintenance Record must accompany the aircraft. The

individual responsible for the operation of the radio equipment is also responsible that the Form 44 is properly maintained during such periods, except in cases where communications personnel are available and assigned to perform this duty.

(3) During the time that an aircraft is temporarily transferred to the local Engineering Department for repair, modification, etc., the Form No. 44 must be retained in the organization to which the aircraft was assigned.

(4) When an aircraft, which has radio equipment installed, is transferred away from an organization, Radio Inspection and Maintenance Records pertaining thereto must be transferred with the aircraft.

(5) When Radio Inspection and Maintenance Records are completely filled, new forms must be initiated to make the entries prescribed herein. Completed Radio Inspection and Maintenance Records are retained in the Communications Office concerned for a period of one year, after which they may be destroyed.

d. Inspection of Aircraft Radio Equipment Which is Not Installed on Aircraft--Aircraft radio equipment issued to communications sections and not installed on aircraft must be inspected, cleaned and tested at least once a month, to determine whether it is in serviceable condition. All items found to be unserviceable must be tagged with a red tag, showing the date of the inspection, the nature of the defect and the steps taken to render the equipment serviceable. Vacuum tubes contained in sealed packages need not be opened and tested.

(1) In the communications section of each Air Corps organization or activity a list of all unserviceable radio equipment of that organization or activity must be posted in a conspicuous place on the wall. This list must show the name of the item, the serial or other identifying number of the article, the nature of the defect that renders it unserviceable and the action taken to effect disposition, repair or replacement. It is recommended that a blackboard, suitably ruled, be used for this purpose.

27. Aerial Camera Inspection Record (A. C. Form 45)--a. General--A record of the inspections performed and maintenance work accomplished on aerial cameras is maintained at all Air Corps activities on the Aerial Camera Inspection Record, illustrated in figure 20. The inspection and maintenance of aerial cameras must be accomplished in accordance with instructions listed on the reverse of the form.

(1) The use of the Aerial Camera Inspection Record and the method of making the required inspections are part of the Visual Inspection System provided for the maintenance of aircraft and their tactical equipment.

(2) An Aerial Camera Inspection Record must be maintained for each aerial camera in service.

(3) Each camera must be inspected daily if in use and at least once a month if not in use.

(4) Entries on the form must be made in accordance with the instruct-

WAR DEPARTMENT
AIR CORPS
Form No. 45
Revised March 18, 1937

WAR DEPARTMENT
AIR CORPS
AERIAL CAMERA INSPECTION RECORD

Months of _____, 19____
Station _____

Camera Type and Serial No. _____
Organization _____

N. C. O. in Charge _____ Rank _____
Assistant _____ Rank _____

Date	BEFORE INSTALLATION													INSTALLATION						DEMOUNTED				FLIGHT REPORT						Remarks	Officer
	Camera	Lens	Shutters	Magazines	View Finders	Level Bubbles	Timer or Watch	Intervalometer	Surge Unit	Cables Electric	Vacuum Hose	Mounts	Filters	Camera	View Finder	Intervalometer	Surge Unit	Fuselage Opening	Reading of Exposure Counter	Camera	Reading of Exposure Counter	Cleaning	Lubrication	Filter Used	Magazine Used	Diaphragm Opening	Shutter Speed	Weather	Number of Exposures		
	1	2	3	4	5	6	7	8	9	10	11	12	13	14	15	16	17	18	19	20	21	22	23	24	25	26	27	28	29	30	31

3—9225

ature _____, *Rank* _____
(Commanding)

Fig. 20. Aerial Camera Inspection Record (Form 45)

ions on the reverse of the form.

(5) When a camera is used on an extended cross-country mission, its inspection record must accompany it and the photographer is responsible for the accomplishment of the record until the camera is returned to its home station.

b. Functions of the Aerial Camera Inspection Record--The functions of the record may be outlined as follows:

(1) To serve as an inspection guide to photographic personnel.

(2) To fix the responsibility for the proper performance of inspections and maintenance operations.

(3) To provide an up-to-date visual record of the condition of maintenance of each aerial camera and to enable responsible and inspecting officers to quickly determine the standard of maintenance of aerial cameras and the frequency and extent of their use.

(4) To provide a record of the equipment used and the conditions which existed during each flight or mission for reference in considering or comparing the results obtained.

c. Disposition of the record--(1) At the end of the month (or months, when the form is used for two or more months) all current Aerial Camera Inspection Records must be signed in the space provided on the bottom of the form and retained in the files of the organization for a period of two years, then destroyed, if no longer required for reference.

(2) When a camera is transferred from one station or organization to another, its accomplished Aerial Camera Inspection Records must be forwarded with it.

(3) When a camera is transferred to the factory for repair or overhaul or has been surveyed, the Aerial Camera Inspection Record must be disposed of as prescribed above.

28. Parachute Record, (A. C. Form No. 46)--a. General--A Parachute Record Card (A. C. Form No. 46) must be used as a maintenance, repair, inspection, and historical record of each parachute. This form, which is illustrated in figure 21, must be maintained under the direction of the officer in charge of parachutes at all activities where parachutes are used or stored, except in the case of detached individuals, offices or activities not having facilities for parachute maintenance. In this event the forms must be maintained by the activity designated to maintain the parachutes and the parachute officer responsible for the maintenance must forward a notification to such detached individuals prior to the dates the parachutes are due for repacking and drop testing. In addition, he must file a copy of such notification with the Forms 46, until the next visit of the Technical Supervisor.

b. Preparation--The Form 46 must be prepared as follows, with the heading filled in on a typewriter:

WAR DEPARTMENT
AIR CORPS
Form No. 46
(Approved Apr. 27, 1936)

PARACHUTE RECORD

(See Air Corps Circular No. 15-46)

Station .... Type .... A. C. No. ....

Date of Mfg. ....

LOCATION		INSPECTED AND REPACKED		DATE		REMARKS
Date	Activity or Individual	Date	By	Last Drop Test	Last Depot Overhaul	Enter any remarks pertinent to the history of this parachute. Enter all repairs made, parts replaced, etc.

2—9996

Fig. 21. Parachute Record (A.C. Form 46) (Face)

TECHNICAL INSTRUCTION COMPLIANCE RECORD

(Other than routine tests, inspections, and overhauls in compliance with T. O. No. 13-5-2)

TECHNICAL INSTRUCTION		COMPLETED			
DATE AND NUMBER	TITLE	DATE AND BY WHOM	INSP. BY	STATION	REMARKS

U.S. GOVERNMENT PRINTING OFFICE 3—9996

Fig. 21. Parachute Record (A.C. Form 46) (Back)

(1) Station.

(2) Type (such as A-1, C-1, S-1, S-2, S-3, S-4, or T-2).

(3) Air Corps Serial Number.

(4) Date of Manufacture.

c. Entries on the face of the form--As events occur, the following entries must be made on the face of the form:

(1) Under the heading "Location"--(a) Enter the date of issue and the name and rank of the individual, or the name of the organization to whom the parachute is ussued.

(b) If the parachute is not issued, its status must be shown as "In Storage", "In Parachute Department" (awaiting or undergoing repair), "Beyond Repair" (awaiting Survey or I. & I).

(2) Under the heading "Inspected and Repacked"--Each time the parachute is given a complete inspection and repacking, as directed by Technical Orders the individual performing the inspection and repacking must enter his initials and the date.

(3) In the column headed "Date - Last Drop Test"--Enter the actual date of drop test.

(4) In the column headed "Date - Last Depot Overhaul"--Enter date of completion of depot overhaul. This entry may only be made by the depot.

(5) In the column headed "Remarks"--Enter here any of the following information when pertinent to the particular parachute:

(a) A description of all repairs and replacements made.

(b) A description of any serious defects or troubles.

(c) If a routine inspection and repacking, drop test, or overhaul is not accomplished when due, show the cause for delinquency.

(d) When accountability is not carried by the activity maintaining the Form No. 46, enter the name of the accountable activity.

(e) When accountability is transferred, enter the authority for such transfer.

(f) When the parachute has been used for an emergency jump, enter the name of the jumper and the date of the jump.

(g) When Report of Survey or I. & I. Report is submitted, enter the date and name of the station.

(h) If the parachute has been in an aircraft accident, enter a statement of the circumstances, including the date of the accident.

(6) When a line is used for an entry in any column, no portion of that line must be used for entry in any other column, excepting entry as to date or remarks pertaining to the original entry. Thus, each remark made applies to the pertinent data on that line. For example, an entry under "Location" reads "8-20-38 - F.A.D.". On the same line, under "Remarks", an entry would read "For Overhaul" - followed by reference to the proper authority.

(7) Whenever the spaces under any one of the headings have been used up, a new form must be started as an added page and the entries continued thereon. Completed pages must be securely stapled together, and then loosely clipped to the active page.

d. Entries on the reverse of the form--On the reverse of the form a Technical Instruction Compliance Record must be maintained as follows:

(1) In the column headed "Date and Number" enter the date and number of each Technical Order or other Technical instruction directing specific changes, "one-time" inspections, or other work, which apply to the particular parachute.

(2) In the column headed "Title" enter the title of such technical instructions.

(3) In the column headed "Completed" enter the date of compliance with the technical instruction and the name of the individual accomplishing the changes, inspections, or other work directed.

(4) In the column headed "Insp. By" enter the initials of the individual who inspected and approved the accomplished work.

(5) In the column headed "Station" enter the name of the station at which the work was accomplished.

(6) In the column headed "Remarks" enter any pertinent remarks, and explain any delays, such as lack of parts or facilities.

e. Filing, routing, and disposition--(1) Forms No. 46 must be filed in numerical order according to the parachute serial number.

(2) When a parachute is ordered shipped to another station, the form 46 pertaining to that parachute must be turned over to the accountable officer who forwards it to the receiving activity as an attachment to the shipping ticket.

(3) Any activity receiving a parachute without its corresponding Parachute Record must request the Form 46 from the shipping station at once and withhold the parachute from issue until the Parachute Record is received.

(4) Any activity receiving a parachute without information as to the shipper, must at once report such incident to the Materiel Division, Wright Field, Dayton, Ohio, giving the serial number of the parachute and circumstances as to its receipt.

(5) Parachute Record Cards must be inspected by the Air Corps Technical Supervisor during regular inspection of each Air Corps Station, including Panama, Hawaii, Puerto Rico, and Alaska.

(6) Parachute Record Cards, showing final disposition of a parachute by approved Report of Survey or approved I. & I. Report, are maintained at the last station and destroyed only after inspection and approval by an Air Corps Technical supervisor. Air Corps stations within the Philippine Department may destroy Parachute Record Cards only upon the approval of the organization commander concerned.

29. Work Order, (A. C. Form 48)--a. General--The Work Order, illustrated in figure 22 is used as outlined herein for requesting and authorizing the performance of work in Engineering Departments of the Air Corps. Although intended primarily for use in connection with depot material and labor accounting, this form may also be used at all stations and bases where Air Corps shops are operated as an aid in shop management, for requesting, authorizing, and recording the performance of work by the Station or Base Engineering Department.

(1) The form has been revised to serve both as a request for work and for the authorization and direction of its accomplishment. The forms may be initiated by any organization or department at the depot or station desiring work to be performed in the Engineering Department, except for the manufacture of Air Corps articles. In this case the forms must be initiated by the Depot or Station Supply Officer. Work Orders initiated by departments other than the Supply are submitted to the Supply Officer for coordination before being submitted to the Engineering Officer except when initiated by the Engineering Department to cover work chargeable to shop maintenance and overhead. Work Orders initiated by other than Air Corps organizations are forwarded through the Air Corps Supply Officer to the Commanding Officer for approval before being submitted to the Engineering Officer.

(2) Separate Work Orders must be issued for each job, article, or quantity of articles of identical construction, for which specific costs of the work involved are desired. In no case, however, must work, chargeable to more than one account symbol, be included on the same Work Order. Work Orders, other than manufacturing, to cover work of a continuing nature (generally referred to as blanket Work Orders), may be initiated periodically as necessary, but should be kept at a minimum.

b. Entries--The following entries must be made on the form at the time of preparation:

(1) The originator's request number, if prepared by other than the Engineering Department.

(2) The date.

(3) The name of the depot or station.

(4) The name of the originating department or organization.

(5) When prepared in the Engineering Department, the account symbol, the Work Order number, the signature of the Engineering Officer, and the name of the branch or unit under his jurisdiction in which the work is to be performed.

(6) A description of the work to be performed.

(7) The property class, if the work involves the manufacture or repair of Air Corps property.

(8) The date completion of the work is desired.

(9) The signature of the originating department head in the space provided in the heading, if originated by other than the Engineering Department.

(10) The quantity, unit, part number, if any, and name of the articles to be manufactured, repaired, etc.

c. Disposition of Work Orders--(1) Work Orders initiated by the Engineering Department to cover shop maintenance and overhead must be prepared in quadruplicate except at depots maintaining a Cost Accounting Department, in which case they are prepared in quintuple and, upon approval by the Engineering Officer, are sent to the Cost Department for checking the correctness of the Account Symbol used and thence routed as follows:

(a) The original, duplicate and triplicate are forwarded to the foreman designated to accomplish the work while the quadruplicate is retained in the Engineering Office. The quintuple copy, if any, is forwarded to the Budget Office, Materiel Division.

(b) When the work is started, the foreman must enter the date, in the space provided, on the original, duplicate and triplicate copies. He must then sign and forward the original to the Engineering Office, where the date of starting the work is entered on the quadruplicate (file) copy. The original must be forwarded to the Cost Office or in the event a Cost Office is not maintained, the original is retained in the Engineering Office, and the quadruplicate destroyed.

(c) When the work is completed the foreman must enter on the duplicate the date of completion, then sign and forward it to the Engineering Office. The triplicate copy must be kept by him.

(d) When the duplicate is received from the foreman, the date of completion of the work must be entered on the copy filed in the Engineering Office. The duplicate is then forwarded to the Cost Office, or if a Cost Office is not maintained, it may be destroyed.

(2) Work Orders initiated by other than the Engineering Department must be prepared in quintuple except at depots maintaining cost accounting, in which case they must be prepared in sextuple.

(a) The original and three or four copies, as the case may be, are forwarded to the Supply Officer for coordination, thence to the Engineer-

WAR DEPARTMENT
AIR CORPS
Form No. 48
(Approved March 4, 1937)

WORK ORDER

Work Order No. _____

Request No. _____ Account Symbol _____
Station _____
Initiating organization _____ Date _____ Property class _____

Signature _____ Date wanted _____
To _____ For accomplishment of the following:
Overhaul _____ | Remarks: _____
Repair _____ | _____
Manufacture _____ | _____

QUANTITY	UNIT	PART NO.	NAME

To Foreman of _____ Coordinated _____
(Supply Officer)
Date started _____
Date completed _____ Approved _____
(Commanding Officer)
_____ Approved _____
Foreman. (Engineering Officer)

Fig. 22. Work Order (Form 48)

ing Officer, except that for other than Air Corps work, approval of the depot or station commander must be obtained before submitting the forms to the Engineering Office. One copy must be retained by the originator for file.

(b) When the Engineering Officer approves the Work Order, the account symbol, Work Order number and name of the branch or unit under his jurisdiction in which the work is to be accomplished must be entered. The copies are then sent to the Cost Department for checking the correctness of the Account Symbol used and disposed of as prescribed for Work Orders initialed by the Engineering Department.

(c) When the Engineering Officer does not approve the Work Order, all copies must be returned to the initiator with a written statement of the reasons for the disapproval.

30. Parts Tags (A. C. Forms 49, 50, 51, 83 and 83A)--a. General--The Air Corps system of maintenance requires that all Air Corps parts or assemblies, not installed on equipment, be properly identified by the use of authorized tags. The following Air Corps forms are used for this purpose:

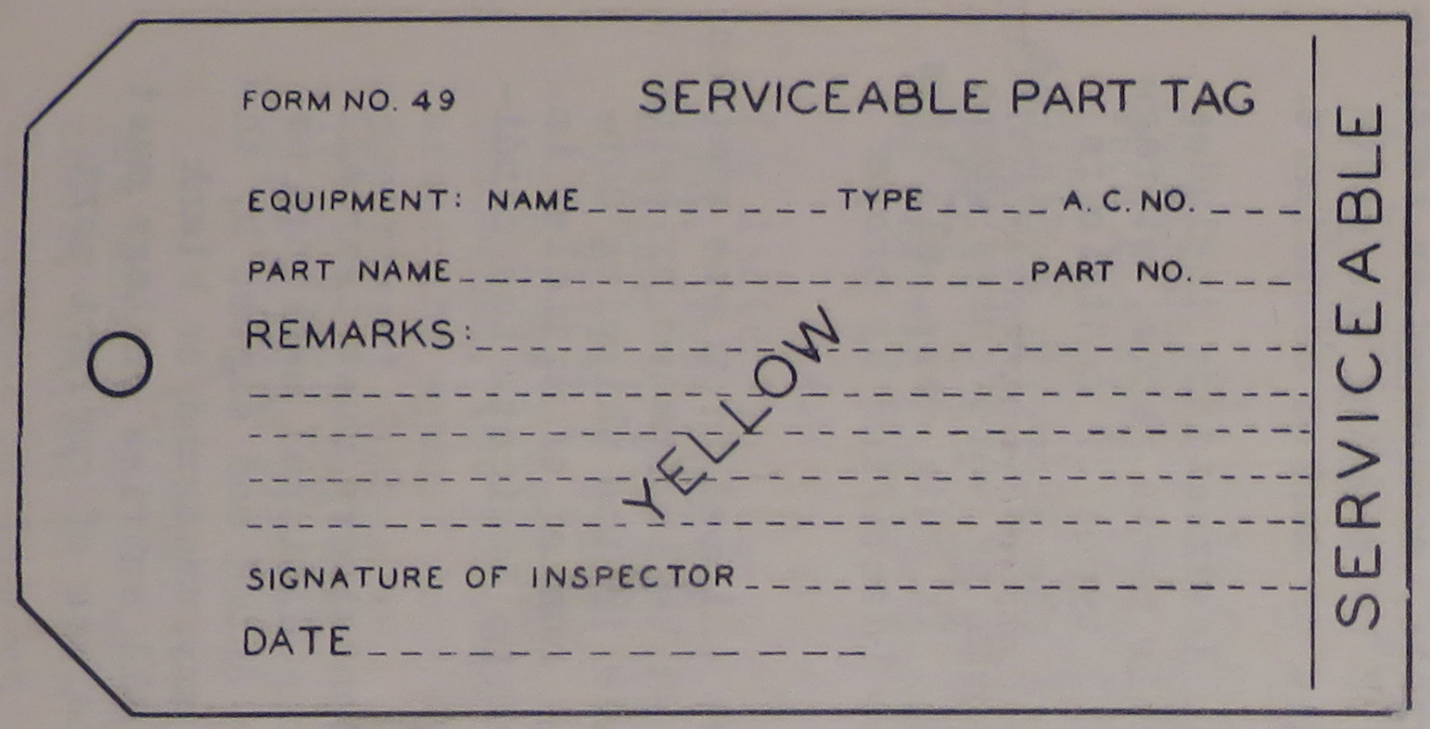

A

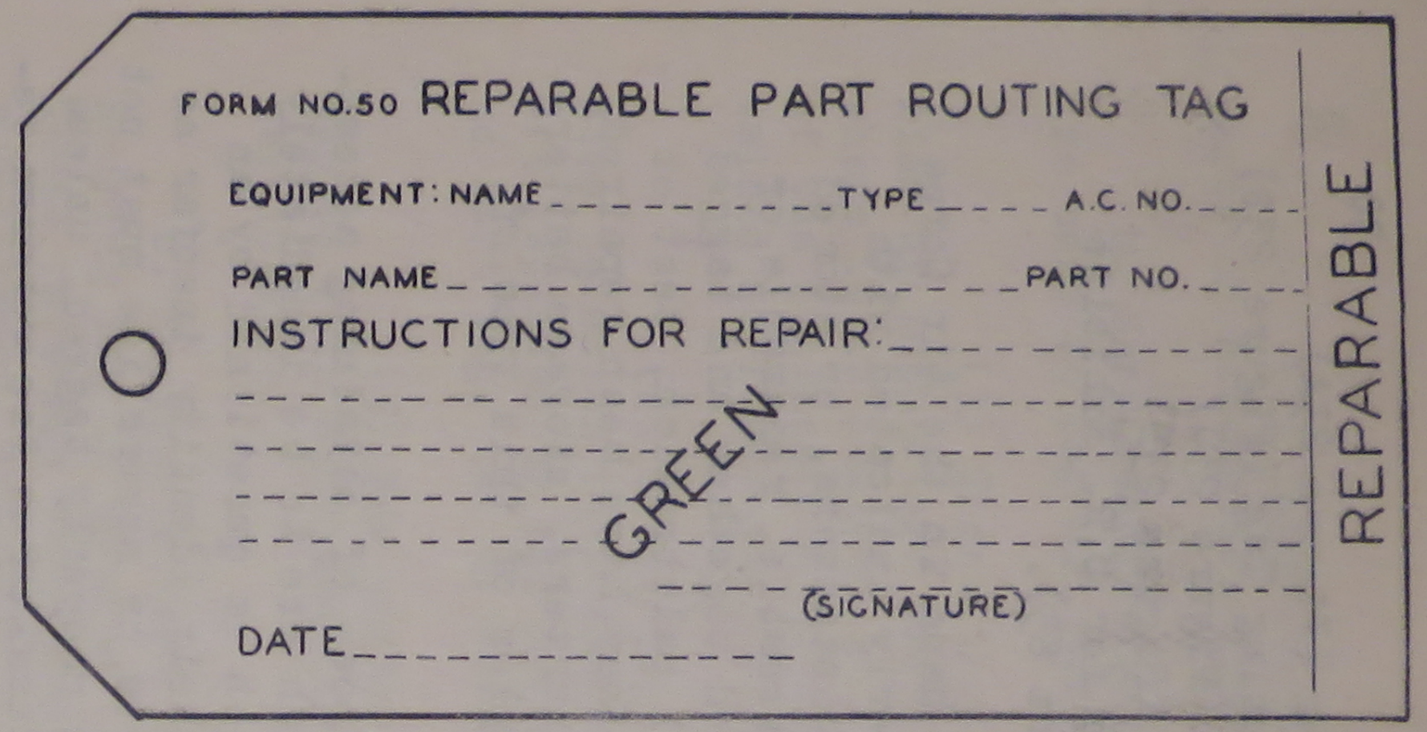

B

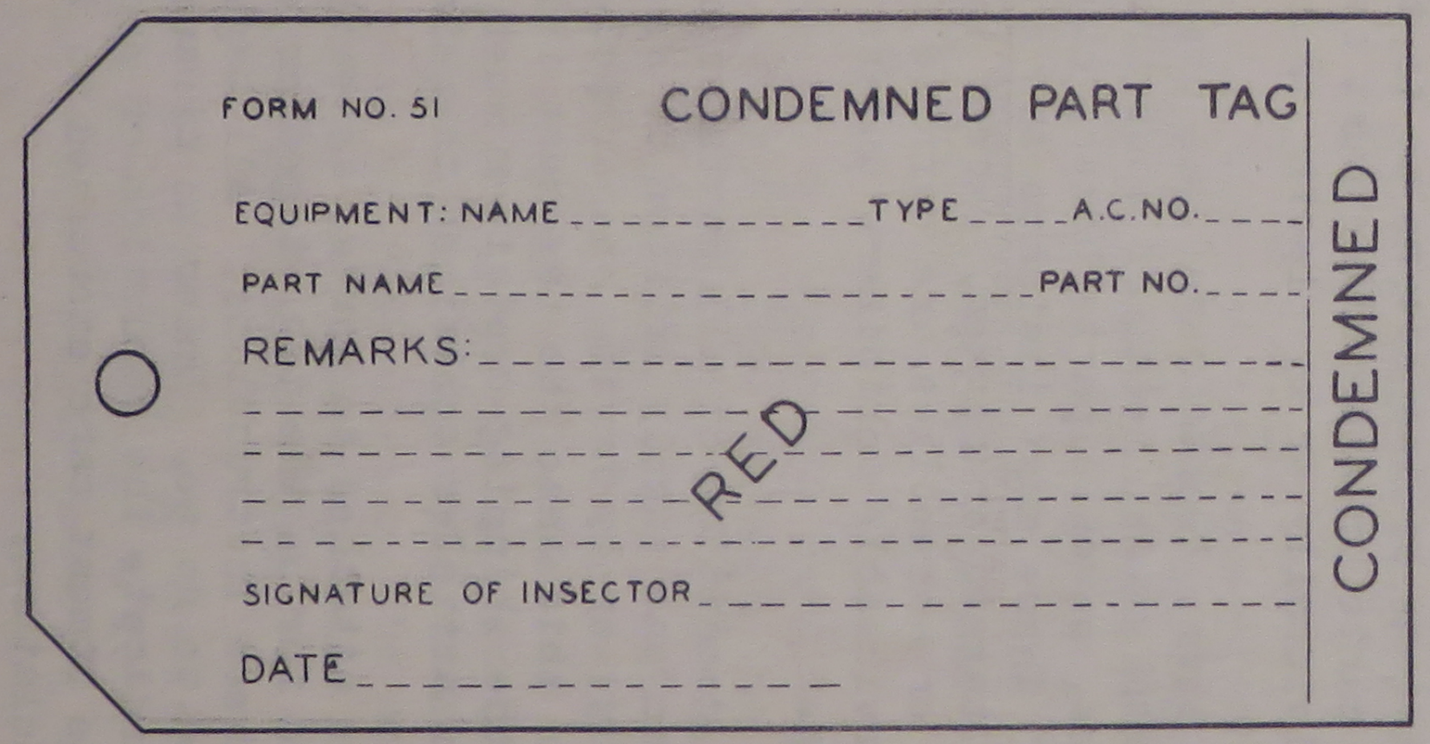

C

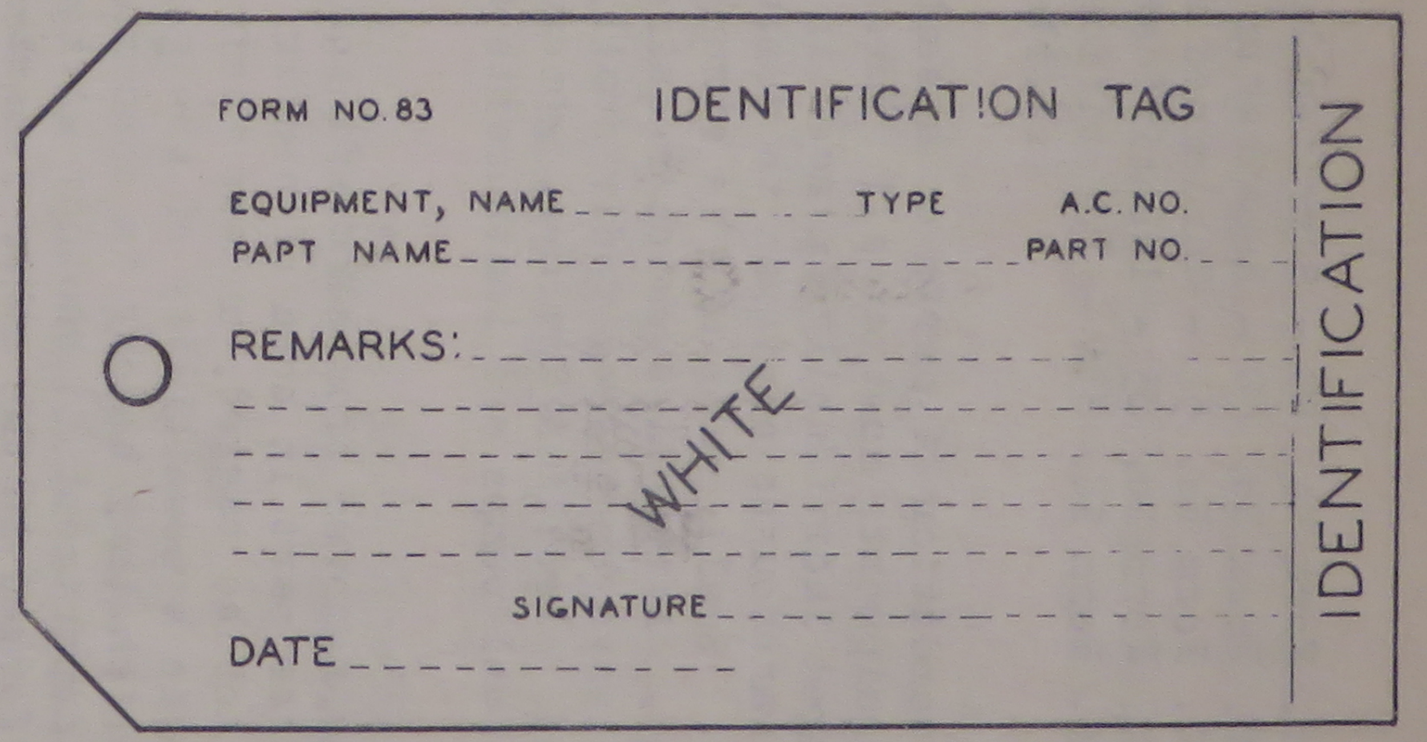

D

Fig. 23. Parts Tags.
A - Serviceable Part Tag (A.C. Form No. 49)
B - Reparable Part Routing Tag (A.C. Form No. 50)
C - Condemned Part Tag (A. C. Form No. 51)
D - Identification Tag (A. C. Form No. 83)

A. C. Form No. 49 - Serviceable Part Tag (Figure 23A)
A. C. Form No. 50 - Repairable Part Routing Tag (Figure 23B)
A. C. Form No. 51 - Condemned Part Tag (Figure 23C)
A. C. Form No. 83 - Identification Tag (Figure 23D)
A. C. Form No. 83A - Identification Tag for U.R. Exhibits (similar to Form 83).

(1) The condition of parts or assemblies on hand in the Air Corps not installed on equipment, must at all times be properly indicated with tags; by being tagged individually, placed in tagged containers, or stored in stock rooms or warehouses assigned to contain serviceable, reparable or condemned property. Small parts may be strung or wired together and tagged in lots, if desired. Assemblies which require special calibration, test or inspection, must always be tagged individually after they have been repaired, tested or inspected. Ignition devices, generators, starters, storage batteries, carburetors, fuel pumps and instruments are examples of this type of assembly.

(2) Parts removed from aircraft for the purpose of obtaining accessibility to some other part in need of repair, and which are to be immediately reinstalled, need not be tagged, unless their condition is questioned by an inspector or there is a possibility of their losing their identity insofar as the equipment to which they belong is concerned. Parts or assemblies must not be moved from one department to another without being properly tagged, unless the work to be performed in the other departments necessitates the workmen removing them.

(3) Decisions of inspectors as to the reparable, condemned or serviceable condition of parts or assemblies must be indicated by tagging the parts or assemblies individually or by placing them in tagged or marked containers.

(4) The term, "Containers", as used in these instructions includes the following: metal pans, metal or wood trays, movable parts racks, storage bins, storage racks, movable parts boxes, etc., and all types of containers used in shipping. These must indicate the condition of the property contained, by being properly tagged or marked, except in stock rooms or warehouses where serviceable parts or assemblies are carried for issue. In this case, all bins are considered serviceable containers unless otherwise identified by proper marking or tagging.

(5) The condition of all parts or assemblies shipped from one station to another, or from one supply officer to another, must be indicated by being tagged individually; or by having one article of a kind in the shipping container tagged. In this case the tag must indicate the number of articles in the shipment; or the shipping container must be marked to indicate the condition and number of articles contained therein.

(6) Tags attached to parts, assemblies or containers must bear all information called for on the tag, together with such additional markings as are required by these instructions. All tags must be dated and signed by the persons authorized to do so. Under no circumstances may unsigned or blank tags be used to indicate the condition of property. All entries on tags must be legible and the utmost care exercised to insure the use of correct part numbers and nomenclature.

(7) Tags which have served their purpose and are removed from parts or assemblies must be destroyed, except as hereinafter provided.

b. Serviceable Part Tag, (A. C. Form No. 49)--The Serviceable Part Tags are used to tag all parts or assemblies that are serviceable.

(1) These tags may be attached to and removed from parts and assemblies by inspectors only. When removed, the tags must be destroyed, except where it is desired to retain them as an historical record for the information of the Engineering Officer or Chief Inspector. In such cases the tags are retained as instructed by the officer concerned.

(2) These tags may never be removed except when the parts or assemblies to which they are attached are installed on equipment, or when the tags are replaced by the Reparable Part Routing Tag, (A. C. Form No. 50) or Condemned Part Tag, (A. C. Form No. 51).

(3) New parts or assemblies received from manufacturers must not be tagged with Serviceable Part Tags until thoroughly inspected, and known to be serviceable.

c. Reparable Part Routing Tag, (A. C. Form No. 50)--The Reparable Part Routing Tag is used to indicate all parts or assemblies that are reparable. These tags may be attached to and removed from parts or assemblies by foremen, sub-foremen, inspectors or such other persons as are authorized by the Engineering Officer or Chief Inspector. When removed, they must always be replaced by either a Serviceable Part Tag, (A. C. Form No. 49) or a Condemned Part Tag, (A. C. Form No. 51) except when the tag is used as provided in sub-paragraph (3) below.

(1) When reparable engines are removed from aircraft for return to a repair activity for overhaul, a Reparable Part Routing Tag must be attached, with the total flying time since last overhaul, and the date and place of removal of the engine entered thereon. Unless the engine is disposed of prior to overhaul, this tag must remain on the engine until the flying time has been stamped on the crankcase as required by Technical Orders, at which time it may be removed and destroyed.

(2) On the reverse side of the Reparable Part Routing Tag are spaces for indicating the routing of repairable parts through the Engineering Department. This routing must be indicated by the use of symbols (letters or numbers) assigned by the Engineering Officer, each department, sub-department, and stock room having a symbol. When reparable parts have been delivered to a department for a repair operation and have been completed insofar as that department is concerned, the foreman or inspector must sign the tag in the space provided after the symbol indicating his department, and forward the part to the next department indicated. When the work is completed on the part or assembly and it is to be delivered to a stock room, the inspector must remove the reparable part routing tag and attach the Serviceable Part Tag.

(3) When the repair work is completed and the routing indicates that the part is to be delivered to the aircraft or engine from which it was removed, instead of to a stock room, a serviceable part tag need not be used. The foreman or inspector must, however, sign the Reparable Part Routing Tag in

the usual manner and forward the parts or assemblies directly to the department indicated thereon. Workmen engaged in the assembly of the aircraft or engines must remove and destroy the tags as the parts are installed, except where it is desired to retain these tags as an historical record, in which case they may be retained in accordance with instructions issued by the Engineering Officer or Chief Inspector.

(4) When reparable parts or assemblies that have been removed from equipment are not interchangeable, they must be returned, upon completion of the necessary repairs, to the same aircraft or engine from which removed. Such parts must be tagged with the Reparable Part Routing Tag plainly marked with the word, "Non-Interchangeable". The routing on the tag must indicate the final return of the parts or assemblies to the department in which they are to be used. If for any reason it is desired to have non-interchangeable parts held in the stock room until they are needed in the assembly of the aircraft or engine from which removed, they must be tagged with an Identification Tag, (A. C. Form No. 83) upon which is indicated the identity of the equipment upon which the parts will later be used, and the parts thus identified turned in to the stock room.

d. Condemned Part Tag, (A. C. Form No. 51)--Except as noted, the Condemned Part Tag is used to tag all parts or assemblies that have become obsolete or have been damaged beyond repair. Parts damaged to the extent that they are obviously beyond repair need not be tagged with Condemned Part Tags; however, parts that require the use of instruments or extremely close inspection to detect flaws or defects must always be tagged with Condemned Part Tags upon which is stated the cause of rejection. If a crack or flaw which is difficult to see is the cause of rejection, the crack or flaw in question must be plainly marked with chalk or paint. Containers used for condemned parts must also be conspicuously marked. All condemned parts or assemblies which are not usually handled in containers should be tagged separately, except where the cause for rejection is so obvious that there is no possibility that the part will ever be mistaken for a serviceable or reparable item. Assemblies may be condemned as assemblies but contain parts which are reparable or serviceable and the Condemned Part Tag attached to such an assembly should therefore indicate this fact.

(1) These tags must be attached to and removed from parts and assemblies by inspectors only. They may never be removed from aeronautical parts or equipment, except as provided for in A. C. Circular 65-12, unless it is found that they should be replaced by a Serviceable Part Tag, or a Reparable Part Routing Tag.

e. Identification Tag, (A. C. Form No. 83)--The Identification Tag, (A. C. Form No. 83) is used to indicate the identity or reservation of: Parts or assemblies for installation on a particular aircraft or engine; stock to be used in the accomplishment of a particular Work Order; material to be shipped; or parts, assemblies, or material held as exhibits, except those covered by Unsatisfactory Reports. The use of this tag is used in addition to the tagging specified herein, to indicate the condition of the parts. Identification tags may only be attached to parts and assemblies by such persons as are authorized by the Supply Officer, and may be removed by the workmen when such parts or assemblies are being installed on the equipment for which they were designated. Parts, assemblies or material must not be reserved in stock rooms

or bins without the use of this tag, nor may the materials thus reserved be issued from stock rooms except for use on the equipment as indicated on the tag.

f. Identification Tag for U. R. Exhibits--The Identification Tag, (A. C. Form No. 83A), is used only for identifying parts or materials on which Unsatisfactory Reports, (A. C. Form 54) are submitted. All parts that are submitted as exhibits to, or that are held pending action on Unsatisfactory Reports must be identified with this tag in addition to the tagging normally used to indicate the condition of the parts. The tags are conspicuously marked with the letters "U.R.", and have spaces for entering the name of the station and the serial number of the Unsatisfactory Report. All entries in the above mentioned spaces must be accomplished each time the form is issued.

31. Unsatisfactory Report, (A. C. Form 54)--a. General--(1) An Unsatisfactory Report, (A. C. Form No. 54), must be submitted whenever any of the following defects occur or are recognized:

(a) Failure or malfunctioning of any item of government material or equipment, used by the Air Corps.

(b) Unsatisfactory design.

(c) Defects due to faulty material, workmanship, or inspection.

(d) Unsatisfactory systems, forms or methods.

(e) Damage in shipping, when due to faulty packing or crating.

(f) When an airplane is held out of commission longer than ten days for lack of parts or supplies, except in cases when advised of a scheduled shipping date beyond the ten-day limit.

(2) Where emergency requires, radio or telegraphic reports may be submitted but must be followed by an Unsatisfactory Report giving the detailed information.

(3) An exception may be made in the case of stock commercial model airplanes and engines, where it is known that many parts and assemblies, such as, hose, hose clamps, pulleys, switches, pumps, etc., do not conform to Air Corps Airplane Designers Handbook or Specification Standards. Although such non-conformity need not be reported, any failure, defect or malfunctioning must be entered on the A. C. Form 54.

(4) When purchase orders specify inspection at destination, rejections must be reported on the Receiving Report rather than the Form 54.

b. Data Required--All headings provided on the form, which is shown in figure 24, must be filled in as applicable. On the line titled "Station", the name of the home station of the organization submitting the report is entered. On the line titled "Name, Type And Serial No. of Equipment", precede the description by the property class number as published in A. C. Circular 65-10. Station serial numbers must be assigned by the Station Engineering Officer, with all the reports from the station numbered in one series. A new series must be

started with number one, at the beginning of each calendar year and this number prefixed with the last two figures of the year.

(1) General--The following instructions, as applicable, pertain to the body of the report and to reports requiring special corrdination. All such reports must contain the following:

(a) A complete description of an individual case and an explanation of the unsatisfactory conditions, including all pertinent information relating thereto, so as to enable investigation and correction of the difficulties reported without the necessity for further requests for information.

(b) The name of station, organization or manufacturer from which the property was received.

(c) The Air Corps order or shipping number.

(d) The total quantity on hand.

(e) The quantity known to be defective.

(f) The time in use, in months or hours.

(g) A description of inspector's stamp.

(h) Inspector's number, obtained from the inspector's stamp.

(2) When an aircraft is reported the Form 54 must include:

(a) The Air Corps serial number.

(b) The engine model and Air Corps number.

(c) The date of last Depot Inspection and Repair (D.I.R.)

(d) The depot at which last D.I.R. was accomplished.

(e) The flying time since last D.I.R.

(f) The total flying time.

(3) When an engine is reported the Form 54 must include:

(a) The engine model and Air Corps serial number.

(b) The model and serial number of the airplane in which installed.

(c) The running time at each overhaul.

(d) The hours since last overhaul.

(e) The depot at which last overhauled.

WAR DEPARTMENT
AIR CORPS
Form No. 54
(Revised September 11, 1936)

WAR DEPARTMENT
AIR CORPS

Mat'l Div.
Serial No. .....

UNSATISFACTORY REPORT
(See A. C. Cir. 15-54)

Station Serial No. ..... Date .....

Station ..... Organization .....

Name, type and ser. no. of equipment .....

Name and part no. of defective part .....

DESCRIPTION OF TROUBLE:

Fig. 24. Unsatisfactory Report (Form 54)

(4) When a system, form, or method is reported the form must include:

(a) A reference to the publication (Air Corps Circular, Technical Order, etc.) and the specific paragraph which it is desired to have changed.

(b) A complete explanation of the unsatisfactory condition caused by the present situation.

(5) When reporting transient aircraft the form must indicate "Transient Aircraft", and include its home station.

(6) When property supplied by other arms or services is reported the form must include:

(a) Proper nomenclature and type (as in the case of Signal Corps, Ordnance, Quartermaster property, etc.).

(b) Serial number, order number, and other pertinent name plate data.

(c) Time in use, in months or hours.

(d) The airplane model and Air Corps serial number, when equipment is installed in an airplane.

(e) Changes or corrective action. If changes or modifications recommended to be made to property of another Arm or Service are not in conflict with Technical Orders, and have the concurrence of the Station Commander and the local representative of the Arm or Service concerned, the recommended changes may be made at the station before forwarding the Unsatisfactory Report. When changes are made, the report must include a statement as to the results obtained.

c. Responsibility and coordination--All Unsatisfactory Reports are routed through the Station Engineering Officer who must investigate them, making changes or taking any corrective action necessary. He must enter his comments by indorsement on all copies, making such additional explanation or recommendations as he deems advisable. In addition, he must decide the desirability of forwarding exhibits to the Materiel Division, and his indorsement must include a statement as to whether parts are being held or forwarded.

(1) Reports on property supplied by another Arm or Service must be coordinated with the local representative of the Arm or Service and his recommendations or other comments included.

(2) If no recommendations are obtainable, this fact must be so stated, and if the proper authority does not concur in the report or recommendations, the reasons for non-concurrence must also be stated.

d. Secret or confidential materiel. Army Regulations 380-5 govern all reports on secret or confidential materiel.

e. Forwarding of exhibits--(1) Wherever practicable, exhibits must be forwarded for examination, except:

(a) When the exhibit is bulky or heavy and photographs are considered satisfactory, they may be sent in lieu of the part, unless otherwise directed by the Materiel Division.

(b) When a report covering a part and failure thereof, has been previously submitted and an exhibit furnished therewith.

(2) When exhibits are forwarded they are sent through the Station Engineering Officer who must see that they are securely and properly tagged. Exhibits from insular stations must be forwarded through the depot.

(3) The disassembly of equipment to obtain exhibits should be limited to the scope of work ordinarily performed by the organization.

(4) Whenever the defective part is not forwarded, it must be held in proper custody, identified by a U.R. Tag, (Form 83A), and its condition shown by an appropriate tag, (Form No. 49, 50 or 51), until a reply to the Unsatisfactory Report is received, except where it is necessary to make repairs and return the parts or equipment to service to avoid an airplane or engine being held out of commission.

(5) If the exhibit to be forwarded is small enough and suitable for mailing, it may be attached to the Unsatisfactory Report. If, however, the exhibit to be forwarded is too large or unsuitable for mailing, it must be properly tagged and forwarded to the Air Corps Supply Officer, Wright Field, Dayton, Ohio, marked for the Chief of the Field Service Section.

(6) Parts or assemblies issued by other Arms or Services must not be forwarded as exhibits unless specific authorization is obtained from the Arm or Service or its representative, Such exhibits should be held in proper custody until a reply to the Unsatisfactory Report is received or disposition is otherwise ordered by the representative of the Arm or Service. Photographs may be submitted.

f. Accountability for exhibits--(1) Expendable articles--Expendable articles may be forwarded without accountability, and may be expended on the proper Cost Account Forms before forwarding. Expendable articles removed from equipment for this purpose must not be picked up on Stock Records.

(2) Non-expendable articles--Non-expendable articles must be forwarded on Shipping Tickets to the Air Corps Supply Officer, Materiel Division, Wright Field, Dayton, Ohio, marked for the Chief, Field Service Section. Such non-expendable articles surveyed at the home station are forwarded without accountability.

(3) When final action on an Unsatisfactory Report has been taken by the Materiel Division, the exhibits are disposed of unless otherwise directed by the Materiel Division, in accordance with regulations applicable to the class and condition of the property concerned.

g. Copies, Routing and Distribution of Unsatisfactory Reports--(1) At

continental stations, five copies of the report must be prepared, unless the report is orginated by the Station Engineering Officer, in which case only four copies are necessary. These copies are then routed and distributed in the following manner:

(a) All copies are first sent to the Station Engineering Officer.

(b) The Station Engineering Officer indorses all copies, retains the quintuplicate, and forwards four copies to the Station Commanding Officer.

(c) The Station Commanding Officer distributes the four copies as follows:

1. Original to Assistant Chief, Materiel Division, Wright Field, Dayton, Ohio.

2. Duplicate to the Chief of the Air Corps, marked "This copy for the Chief of the Air Corps".

3. Triplicate to the Control Depot.

4. Quadruplicate to the originator.

(d) If the report is initialed other than at the home station of the organization, it must be submitted through the home station.

(2) At insular stations, routing and distribution must be as outlined above with the following exceptions:

(a) The Station Commanding Officer forwards original, duplicate and triplicate to the insular depot.

(b) The Depot Commander enters his comments by indorsement, retains the triplicate, and distributes the copies as follows:

1. Original to the Assistant Chief, Materiel Division, Wright Field, Dayton, Ohio.

2. Duplicate to the Chief of the Air Corps, marked: "This copy for the Chief of the Air Corps".

(3) In either of the above cases, only the original copy need be signed by the initiating officer.

h. Disposition--Unsatisfactory Reports must be retained in the station file for two years, after which they may be destroyed.

i. Action by the Materiel Division--The Materiel Division must reply to each Unsatisfactory Report, sending three copies of the reply to the originating station, one copy to the Chief of the Air Corps, and a copy to the depots concerned.

(1) This reply from the Materiel Division must contain the following information:

(a) Acknowledgement of all report immediately, except when a final reply, closing the report, is made without delay, following receipt.

(b) Disposition, or shipping instructions for parts held as exhibits.

(c) A specific statement as to when final action closes the particular case and releases parts held as exhibits.

j. Follow-up by the Reporting Station--At each station the Station Engineering Officer must maintain a complete file of all Unsatisfactory Reports submitted by activities at that station, and of all copies thereto from the Materiel Division, as well as all follow-up correspondence.

(1) Follow-up letters must be sent to the Chief of the Air Corps, through the Assistant Chief, Materiel Division, Wright Field, Dayton, Ohio, when final action has not been received within four months (five months for territorial possessions) after date of forwarding the indorsement of the Station Commander.

(2) The Materiel Division must indorse these follow-up letters to the Chief of the Air Corps, giving the status of the Unsatisfactory Report involved.

(3) Commanding Officers are responsible that replies from the Materiel Division are promptly transmitted to the offices concerned at the station.

32. Technical Order Compliance Reports, (A. C. Form 55)--a. General--The Technical Order Compliance Report, illustrated in figure 25, is used for reporting to the Chief of the Materiel Division, compliance with all technical orders in which the requirement for rendition of the report is specifically included. Technical Orders to be thus reported must have the following note included in the heading:

"Report of compliance with this technical order will be made on A. C. Form No. 55, in accordance with A. C. Circular 15-55."

b. Preparation--At stations other than depots, the form must be prepared in each organization complying with the Technical Order being reported, a separate form being submitted as soon as practicable after completion of the work, for each article of equipment affected, except that where the Technical Order is complied with on several articles at the same time, the serial numbers of all the airplanes, engines, or other items affected may be included on one form. The forms must be signed by the officer or his authorized representative having immediate jurisdiction over the work performed, and forwarded with duplicates attached to the station or base engineering officer, who retains the duplicates and forwards the originals to the Chief of the Materiel Division. The station file of duplicates must be retained until inspected by a representative of the Inspection Section, Office, Chief of the Air Corps, after which they may be destroyed.

WAR DEPT.
AIR CORPS
Form No. 55 (Tentative)
Revised 7-1-40

TECHNICAL ORDER COMPLIANCE REPORT
(DUPLICATE)

T. O. No. ..... Model .....

T. O. Date ..... Serial No. .....

Date of Compliance ..... Organization .....

Station or Base .....

Remarks: .....

.....

.....

.....

Inspector ..... Approving Officer .....

Fig. 25. Technical Order Compliance Report (Form 55)

c. Submission of reports--At depots, unless otherwise prescribed in the particular technical order affected, the Technical Order Compliance Reports must be submitted monthly, as of the last working day of the month, a separate form being used for each technical order complied with. In this case, the report of each technical order must list the serial numbers of all equipment on which the work was accomplished during the month. The forms must be made out in duplicate, signed by the individual responsible for the performance of the work reported, and forwarded with duplicates attached, to the Depot Engineering Officer, who retains the duplicate and forwards the original to the Chief of the Materiel Division. The file of duplicates must be retained until inspected as prescribed above.

d. Entries--Entries on the forms must be made as follows:

(1) In the heading of the form, enter the number and date of issue of the technical order.

(2) Under "Station" and "Organization", enter the name of the station and organization submitting the report.

(3) Under "Date of Compliance", enter the date the technical order was complied with. Where more than one item of equipment is listed on the form, this date must be that of compliance on the last item.

(4) Under "Equipment Affected", enter the name or description of the equipment on which the work was performed, for example: B-17 airplane, R-1535-11 engine, etc.

(5) Under "Serial Numbers", enter the serial numbers of the items of equipment on which the technical order was complied with. Where the technical order specifies compliance on articles in stock and no serial numbers are involved, the compliance must be reported in the space for "Remarks".

(6) Under "Remarks", enter any pertinent remarks. This space may

also be used to continue the listing of serial numbers of the items of equipment affected.

(7) Under "Signatures", the forms must be signed by the individual responsible for the accomplishment of the work reported and by the approving officer.

33. Parachute Inspection and Drop Test Card, (A. C. Form 58)--a. General--The Parachute Inspection and Drop Test Card, illustrated in figure 26, must be used for recording various data in connection with the drop testing, repacking, and inspection of parachutes. A Form 58 must be initiated for each new parachute at the time it is first packed for service use and be continued as outlined herein during the life of the parachute.

b. Preparation--The Parachute Inspection and Drop Test Card must be prepared in the following manner:

(1) Opposite the heading "Type" must be entered the correct type symbol of the parachute.

(2) Opposite the heading "Part Number" must be entered the Air Corps part number of the parachute.

(3) Opposite the heading "Serial Number" must be entered the Air Corps serial number of the particular parachute which is stamped on the skirt of the canopy.

c. Recording--The operations are recorded in ink in the following manner after the form has been prepared as described above:

(1) In the column headed "By", enter the initials of the first and middle names and the last name in full of the individual responsible for the operation being recorded.

(2) In the column headed "Date", enter the date of completion of the particular operation preceded by the applicable letter listed below to indicate the specific operation being recorded. The letters used for the purpose may be defined as follows:

"D" - indicates Drop-Test
"R" - indicates Repacking.
"I" - indicates Inspection.

(3) In the column headed "Station", enter the name of the activity accomplishing the operation being recorded.

d. When all spaces on the form have been filled, a new form must be prepared and the entries indicating the last drop-test, repacking, and inspection transcribed to the new form. All data from the entries must be copied and the replaced forms retained by the station parachute officer for one year, after which time they may be destroyed.

WAR DEPARTMENT
AIR CORPS
Form No. 58

PARACHUTE INSPECTION AND DROP-TEST CARD

Type .....

Part No. .....

Serial No. .....

Serial No. .....

BY—	DATE	STATION

Fig.26. Parachute Inspection and Drop-Test Card (Form 58)

e. Forms 58 must be folded with the crease extending across the width of the card so as to permit insertion in the pocket on the parachute pack assembly. The current Form 58 must always be kept in the pocket and accompany the parachute when transferred.

34. Technical Instruction Compliance Record, (A. C. Forms 60A and 60B)--a. General--The Technical Instruction Compliance Records used in connection with aircraft are designated as Form 69A while those applying to engines are designated as Form 60B. Due to the similarity between these two records only Form 60A is illustrated in figure 27. These forms must be prepared and maintained at all Air Corps activities and National Guard units in accordance with the following instructions.

(1) The primary purpose of the Technical Compliance Records for aircraft and engines is to furnish an historical record of all "one-time" changes and inspections performed on an airplane or engine throughout its entire service life. The record must be complete, and all entries made on these forms must be continuations of those already entered.

(2) The information recorded on the form provides the following:

(a) A method for operating activities to record technical instructions directing "one-time" inspections, changes or modifications, which must be accomplished by the operating activity, and the accomplishment thereof.

(b) A record of the work performed when aircraft are sent to depots for the express accomplishment of some technical change.

(c) A record of depot inspections and repairs of aircraft, the name of the depot that accomplished such inspections, the technical instructions complied with, and the total flying time when such work was accomplished.

(d) A record of overhauls of engines, the name of the depot performing the overhaul, the technical instructions complied with, and the total flying time when such work was accomplished.

b. Initiation and entries--(1) All entries except signatures and initials of individuals must be made by typewriter in accordance with the following instructions:

WAR DEPARTMENT
AIR CORPS
Form No. 60 A
(Tentative)
Rev. July 1, 1940

TECHNICAL INSTRUCTION COMPLIANCE RECORD

Page No..... Aircraft model ..... A. C. No..... Date of purchase .....

Squadron No. .....

TECHNICAL INSTRUCTION			LOCALLY					DATE COMPLETED	INSPECTED		ORGANIZATION
DATE	NUMBER	TITLE	Immediately	Soon as Possible	Soon as Pract'ble	At Depot	Form 55 Req'd.		Inspector	Engineering Officer	

135.

WF-6-28-40-40M

Fig. 27a. Technical Order Compliance Record (Form 60A) (Face)

HISTORICAL RECORD

RECORD OF ASSOCIATE EQUIPMENT

ARTICLE	MODEL	A. C. or Serial No.	INSTALLED		REMOVED		DISPOSITION
			Date	Airplane Time	Date	Airplane Time	

REMARKS

Precede each remark with name of station and date
Enter each accident which resulted in damage or was caused by material failure. Show cause and result.

RECORD OF TRANSFERS

RECEIVED BY AND SHIPPED BY		DATE	HOURS SINCE D. I. R.	TOTAL HOURS	INSPECTED Sig. of Eng. Off. Tech. Order 00-25-8
Station	Organization				

136.

Fig. 27b. Technical Order Compliance Order (Form 60A) (Back)

(a) Whenever a new airplane or engine is received from the contractor's plant by any station, activity, Air Corps representative, National Guard instructor on detached service, etc., a form must be immediately initiated by the receiving activity as follows:

1. If the airplane or engine is to be placed in service immediately, the engineering officer of the receiving squadron, unit, or other activity must initiate the required form or forms.

2. If the airplane or engine is to be held in station or depot storage, the station or depot supply officer must initiate the required form.

(b) In the event that technical instructions directing "one-time" inspection of, or changes to, new equipment, are received prior to the initiation of the form for such new equipment, the instructions, if required to be placed on the forms, must be entered at the time the forms are initiated. If a Technical Order requires changes only on a certain group of any model airplane or engine, the serial numbers of the airplanes or engines affected will be listed in the Technical Order if practicable, and the note at the heading of the Technical Order will require entry on the form "for the airplane (or engines) affected". If a change specified by a Technical Order is to be adopted as standard and incorporated by the manufacturer on subsequent airplanes or engines, the Technical Order will so state. Occasionally, in such cases, a manufacturer will accomplish a change on an airplane or engine which is listed in the Technical Order for change by the service. This fact will not preclude the entry of the Technical Order on the original form if required, but entry must be made and compliance by the manufacturer indicated in the column headed "Organization".

(c) In the event that a form is lost, a new one must be prepared immediately and every effort made to incorporate on the new form all the information contained in the lost one.

(2) Entries on the face of the form--(a) The required data must be entered in the spaces provided for "Page No.", "Aircraft Model", "Engine Model", "A. C. No.", "Date of Purchase", "Squadron No.", "Installed In", etc.

(b) The following pertains to entries under the heading "Technical Instructions" in the columns marked "Locally", "At Depots", and "Form 55 required":

1. All technical instructions which direct the accomplishment of a technical change to, or a "one-time" inspection of, an aircraft or an engine by service activities will contain in the heading, a note requiring entries on Forms No. 60A and 60B and specifying when and by whom the work must be accomplished. Immediately upon receipt of technical instructions specifying accomplishment by activities other than depots, and requiring entries on the form, the engineering officer (or the supply officer if the equipment is in storage) responsible for the equipment and having the forms in his possession must enter on the proper form, the date, number and title of the technical instructions and indicate when the work is to be accomplished by placing an asterisk in one of the columns headed "immediately", "as soon as possible", or

"as soon as practicable" as the case may be. Service activities must not make entries of technical instructions which specify work to be accomplished only by depots. Frequently, in the interest of brevity, Technical Radiograms and Telegrams do not contain the statement specifying when and by whom the work must be accomplished, but whenever one-time inspections or changes to equipment are directed the instructions must likewise be entered on the forms.

2. If the technical instructions require the submission of a Form 55, an asterisk must be inserted in the column headed "Form 55 Required".

(c) The following pertains to entries under the headings "Date Completed", "Inspected", and "Organization".

1. Upon completion of the work directed by the technical instructions, the inspector of the squadron, unit or activity responsible for the accomplishment of the work must enter the date the work is completed, the initials or name of the organization accomplishing the work, and his initials in the columns provided. The name of the station need not be shown unless the work was done at a station other than that of the aircraft. The inspector must also initiate the Form 55 (Technical Order Compliance Report), whenever submission of the form is specified. The Engineering Officer of the squadron, unit, or activity responsible for the accomplished work must then enter his initials in the column provided, as an indication that the technical instructions have been properly complied with and that the Form 55, if required, has been submitted.

2. When a technical change is accomplished at a station other than the home station of the aircraft, and the forms are not with the aircraft, notation of such accomplishment must be made on the Airplane Flight Report and the Commanding Officer of the home station notified by letter. In such cases, the unit charged with the maintenance of Forms 60A and 60B must then make the entries of compliance. The initials of the inspector and the Engineering Officer signify that the change has been completed to their satisfaction, and that a Form 55, if required, has been submitted.

3. When a technical change is accomplished by a depot at a time other than at overhaul of an engine or Depot Inspection and Repair of an airplane, only such Technical Orders as are complied with at that particular time and which direct one-time changes to, or inspection of, equipment, may be entered by the depot.

4. Upon receipt of aircraft or engines with accompanying forms, for depot inspection and repair or engine overhaul, the depot must enter the following as a continuation of the record already on the forms:

(a). All current technical instructions requiring entry that were not entered by the activity from which the equipment was transferred.

(b). Those specifying compliance by depots only.

(c). All technical instructions requiring entry that are received while the aircraft or engine is at the depot.

(d) Technical instructions which direct one-time changes or inspections to equipment and that are complied with by the depot.

(d) Whenever a Technical Order is received which replaces a previous issue of the same Technical Order, a line must be drawn through the original entry on the form, regardless of whether the work has been accomplished or not, and a new entry made bearing the date of the last issue of the Technical Order. If the work has been accomplished prior to receipt of the latest issue, a notation to that effect must be made opposite the new entry. If a replaced Technical Order has not been complied with, a line must be drawn through the old entry on the forms and a notation made opposite the old entry that the Technical Order thus lined out has been replaced by Technical Order No. _____ dated _____. When a Technical Order replaces a previous Technical Order, and specifies additional work, a new number is usually assigned to insure that a new entry will be made on the form.

(3) Entries on the reverse side of the form--(a) The following pertains to entries under the heading "Record of Associate Equipment".

1. Form No. 60A--Enter the model, serial number, date installed, date removed, and disposition of all engines installed in or removed from the aircraft. Spaces provided for entering airplane flying time under the headings "Installed" and "Removed" must also be filled in at the time of installation and removal of engines.

2. Form No. 60B--Enter the model or type of starter, carburetor, magneto generator, fuel pump, vacuum pump, etc., that should be installed on the engine. This data must be entered by the activity initiating the form. Spaces provided for recording the serial numbers of the various items classified as "associate equipment" must be filled in at the time such equipment is installed, also the spaces for recording the engine time at which individual items of associate equipment are installed and removed must be filled in at the time of installation or removal of such equipment. This data must be entered by the activity making the installation or removal. When articles of associated equipment are installed on an engine undergoing work in a depot, the entries must be made by the depot engineering department. Supply departments may make no entries in this space except in the case of initiation of forms for new equipment received for storage.

(b) The following pertains to entries under the heading "Record of Transfers".

1. Whenever equipment is received for storage, or is issued from storage, by a depot or station supply officer, the name of the depot or station, the designation of the supply activity and the date of receipt or issue must be entered in the proper columns. Equipment received for immediate re-issue or shipment to another activity or station need not be considered as being received for storage, and no entries by the supply officers are required in such cases.

2. Whenever an operating unit receives or transfers the equipment, including transfers for depot inspection and repair or engine overhaul, the name of the station, the designation of the organization or activity

and the date of receipt or transfer must be entered.

3. Shipment must be indicated by placing a small "s" immediately ahead of the date of shipment, and receipt, by placing a small "r" immediately in front of the date received.

4. The hours since Depot Inspection and Repair or Engine Overhaul and the total hours at the date of transfer must be recorded in the appropriate columns.

5. The column headed "Inspected" must be initialed as indicated below:

(a) By the Depot Supply Officer when airplanes or engines are received for storage, depot inspection and repair, or overhaul, and when airplanes or engines are shipped to another depot, station, or similar activity. The initials indicate that all entries for which the Supply Officer is responsible have been properly made. Inter-department movements within a depot such as the delivery of an airplane or an engine from a Depot Supply Department to a Depot Engineering Department for accomplishment of work, or the return of airplanes and engine to the Depot Supply Department after accomplishment of work, need not be considered as a transfer and no entries are made in the "Record of Transfer" spaces for such movements. Similarly, no entries need be made in this space for airplanes or engines received at a depot for modification or repairs of a minor nature where no transfer of accountability or shipping ticket is involved. All depot entries in this space must be made by the Depot Supply Officer.

(b) By the Station Supply Officer when airplanes or engines are shipped to, or received from, a depot, another station, a squadron, or organization. These initials indicate that all entries for which the Station Supply Officer is responsible have been properly made. No entries are required in the case of equipment which is to be immediately re-issued.

(c) By the squadron or activity engineering officer whenever the equipment is received or transferred. For received equipment, the initial means that the engineering officer has checked the record and the equipment to which it pertains and is familiar with the status of technical compliance. For transferred equipment it means that the form is correct and truly portrays the technical compliance status of the aircraft.

(d) By the Station Engineering Officer, whenever he makes the inspections of received or transferred equipment required by Technical Orders.

(c) The following entries must be made under the heading "Remarks".

1. Dates of all previous depot inspections and repairs or engine overhauls.

2. The name of the depot that accomplished the last depot inspection and repair or engine overhaul and the date of its completion.

3. The total flying time at last depot inspection and repair or engine overhaul.

4. Such other information as would be of possible future interest or value, such as, top overhaul of the engine, replacement of major assemblies on the airplane or engine, damage to the equipment from accident or other causes, the oversize, when the engine is equipped with cylinders of oversize bore, etc.

5. List of service test equipment installed, if any.

(4) Whenever the space under any one of the headings on the form has been completely filled, additional forms may be used to continue the record. The spaces for "Page No.", "Airplane or Engine Model", "A. C. No.", "Date of Purchase", "Squadron No.", and "Installed In" must be filled in on the new form and subsequent entries made on this form until any one column is completely filled. Completed pages requiring no additional entries must be securely stapled together and clipped to the active page or pages to constitute the complete Technical Order Compliance Record.

c. Filing, maintenance, forwarding and disposition of forms--The Engineering Officer of the squadron, unit, or other activity actually maintaining the aircraft, if in service, is responsible for the maintenance of Forms 60A and 60B for the equipment in the possession of the squadron, unit, or other activity. He is also responsible that the proper entries are made on such forms while the equipment is under his jurisdiction. The forms may be filed separately or Forms 60B may be filed with Forms No. 60A for those engines installed in aircraft. All inactive and active pages of Forms 60A together with those of Forms 60B, for the installed engines, must be clipped together and forwarded to the new organization whenever the equipment is transferred.

(1) For aircraft and engines in storage, the depot or station supply officer, having jurisdiction over the equipment must maintain the Technical Compliance Records pertaining thereto, and be responsible that all technical instructions which must be complied with by the operating activity when the equipment is placed in service, are listed. In the event the work directed by such instructions is required to be accomplished prior to issue, the supply officer is responsible that the data relative to such accomplishment is properly entered.

(2) Whenever the equipment is transferred to another organization or activity for operation, necessary work, or storage, the pertaining forms must be promptly forwarded to the new organization or activity through the proper engineering-supply channels, which are normally the Station Engineering and Air Corps Supply Officers.

(3) The forms must accompany the aircraft, when sent to Air Depots for the express accomplishment of necessary work or some technical change or for Depot Inspection and Repair of airplanes or overhauls of engines. Where change of accountability is involved or the aircraft or engine is received for Depot Inspection and Repair or overhaul, the depot is responsible for the maintenance of the forms throughout the entire period of time the aircraft or engine is at the depot, and must make all required entries. Forms thus ac-

companying equipment to the depot must be returned with the aircraft or engine. In the case of engines transferred to the depot for overhaul or storage, and airplanes transferred to the depot for storage or work of any nature if, upon completion of the work, the airplane is transferred to an activity other than the one from which it was received, the forms must be forwarded by the depot to the new activity at the time of transfer. While aircraft and engines are at the depot, the officer under whose jurisdiction the equipment may be at any time is responsible for the maintenance of the forms; thus, if the engine or aircraft is in the Engineering Department for the purpose of the accomplishment of work of any nature, the Engineering Officer is responsible, and if the equipment is in the custody of the Supply Officer prior to or following the accomplishment of work of any nature, the Supply Officer is responsible.

(4) When the equipment to which they pertain is dropped from the records, the Technical Compliance Records must be retained for a period of six months by the Supply Officer last accountable, after which they may be destroyed, provided they have been inspected by a representative of the Inspection Division, Office, Chief of the Air Corps.

35. Propeller Historical Record, (A. C. Form 61)--a. General--The Propeller Historical Record, illustrated in figure 28, must be prepared and maintained by all Air Corps activities and National Guard units for each controllable propeller on hand, in service or in storage. The purpose of this form is to provide a record of each controllable propeller that will show the total hours of operation, operating time since overhaul, the number of overhauls, repairs, replacements of parts, etc.

(1) Whenever a new controllable propeller is received from a contractor's plant by any station or activity, a Propeller Historical Record must be initiated by the receiving authority as follows:

(a) If the propeller is to be placed in service immediately, the Engineering Officer of the receiving unit must initiate the record.

(b) If the propeller is to be held in storage, the responsible Supply Officer must initiate the record.

(2) In the event that a Form No. 61 is lost, a new form must be prepared immediately and every effort made to incorporate all the information contained on the lost form.

b. Maintenance of the Record--The Historical Record for controllable propellers on aircraft must be maintained by the Engineering Officer of the organization responsible for the maintenance of the aircraft.

(1) Depot and Station Supply Officers are responsible for the preparation and maintenance of Forms No. 61 for controllable propellers in depot or station storage.

(2) Depot Engineering Officers are responsible for the preparation and maintenance of Forms No. 61 for all controllable propellers on hand or undergoing overhaul at the depot, except those that have been turned over to the Depot Supply Officer for depot storage.

WAR DEPARTMENT
AIR CORPS
Form No. 61
Approved October 29, 1937

PROPELLER HISTORICAL RECORD

Propeller type _____ Dia. _____ Blade drawing No. _____

Purchase order No. _____ Date received _____ Hub design No. _____

INSTALLED				REMOVED		IDENTIFICATION A. C. SERIAL NUMBERS	PROPELLER HOURS	
STATION AND DATE	ENGINE MODEL AND SERIAL NUMBER	AIRPLANE MODEL AND SERIAL NUMBER	AIRPLANE HOURS AT INSTALLATION	STATION AND DATE	AIRPLANE HOURS AT REMOVAL		SINCE LAST OVERHAUL	TOTAL
						Hub No.		
						Blade No.		
						Blade No.		
						Blade No.		
						Hub No.		
						Blade No.		
						Blade No.		
						Blade No.		
						Hub No.		
						Blade No.		
						Blade No.		
						Blade No.		
						Hub No.		
						Blade No.		
						Blade No.		
						Blade No.		
						Hub No.		
						Blade No.		
						Blade No.		
						Blade No.		
						Hub No.		
						Blade No.		
						Blade No.		
						Blade No.		
						Hub No.		
						Blade No.		
						Blade No.		
						Blade No.		
						Hub No.		
						Blade No.		
						Blade No.		
						Blade No.		
						Hub No.		
						Blade No.		
						Blade No.		
						Blade No.		

3—10692

Fig. 28. Propeller Historical Record (Form 61)

(3) Whenever the space under any one of the headings on Form 61 has been used up, a new form may be started as an added page and all completed pages must be securely stapled together, then loosely clipped to the active page.

c. Entries--Insofar as practicable, all entries must be made by typewriter. Whenever the propeller is installed on an airship the word "airship" must be substituted for "airplane". Entries are made as follows:

(1) Entries on the face of the form:

(a) Enter the required data in the heading, as indicated.

(b) Whenever a controllable propeller is installed on an airplane, or a new blade is installed on a controllable propeller in service, make the following entries.

1. Under the heading - "Station and Date" - On the upper line, enter the name of station making the installation, and on the second line, the date.

2. Under the heading - "Engine Model and Serial No." - On the upper line, enter the model, such as "R-1340", "R-1820-23", etc.,and on the second line, enter the engine serial number.

3. Under the heading - "Airplane Model and Serial No."- On the upper line, enter the airplane model designation, such as "O-38B", "B-10A", etc., and on the second line enter the airplane serial number.

4. Under the heading - "Airplane Hours at Installation" - Enter the "Hours Since Overhaul" of the airplane at time of installation, as shown by the last entry in column 4 of the Maintenance Inspection Record, Form 41.

(c) Whenever a controllable propeller is removed from an airplane for the replacement of a blade, overhaul, or reinstallation on another airplane, enter the following data:

1. Under the heading - "Station and Date" - On the upper line, enter the name of station at which the propeller is removed and, on the second line, the date of removal.

2. Under the heading - "Airplane Hours at Removal" - Enter the "Hours Since Overhaul" of the airplane at the time the propeller is removed, as shown by the Maintenance Inspection Record.

(d) Under the heading "Identification", enter the Air Corps serial number of the hub and of each blade installed.

(e) Whenever a controllable propeller is removed for replacement of a blade, reinstallation on another airplane, or overhaul, enter the operating time "Since Last Overhaul", of the hub and each blade. This time is obtained by subtracting the "Airplane Hours at Installation" from the "Airplane Hours at Removal", and adding to the difference the hub and blade hours "Since Last Overhaul", as shown in the preceding entry. The resultant

total will be the operating hours of the hub and each blade "Since Last Overhaul". At the same time, add the hours since last overhaul of the hub and each blade to the previous total for the hub and each blade and enter the result in the column marked "Total". The figure thus secured will be the total hours of operation of the hub and each blade.

(f) When a propeller is given a general overhaul, the column headings "Installed" and "Removed" must be ignored and the following entries made by the activity accomplishing the overhaul:

1. Under the heading "Station and Date", enter the name of the activity performing the overhaul and the date of its accomplishment.

2. Across the other columns, enter the words "General Overhaul".

3. Enter the serial number of the hub and installed blades in the "Identification" column.

4. Show the propeller hours "Since Last Overhaul" as zero.

5. Enter the total operating time of the hub and each blade in the "Propeller Hours - Total" column. The operating time of any blade in another hub must be carried forward to the "Total" column, so that such total will be the actual hours of operation of the blade since originally procured.

6. If the activity accomplishing the general overhaul installs the propeller after having made the above entries, the next horizontal space must then show all column entries under "Installed".

(2) Entries on the reverse of the form.--In the space provided for remarks, record the following data preceded by the name of the station and the date of entry:

(a) The date that the propeller is condemned or declared damaged beyond repair.

(b) The date that a new blade is installed and the reason the blade it replaces was removed.

(c) Repairs made or parts replaced and the reasons involved.

(d) Compliance with Technical Orders directing "one-time" inspections, maintenance, etd.

d. Disposition of the form--Propeller Historical Record cards for installed controllable propellers may be filed with the Technical Instruction Compliance Record for the aircraft on which it is installed, or they may be filed separately, as desired. When propellers are in stock the forms are filed as directed by the responsible Supply Officer.

(1) When controllable propellers are shipped either separately or installed on aircraft, the Propeller Historical Records must be forwarded to

the receiving activity as promptly as possible. Likewise, the Propeller Historical Records for propellers installed on aircraft that are sent to Depots for periodic inspection and repair, complete reconditioning, or other work, must accompany the aircraft. Every effort must be made to have Propeller Historical Records reach the receiving station or activity simultaneously with propellers.

(2) In the event that a controllable propeller hub assembly, blade or the complete propeller assembly is destroyed or condemned, the historical record card must be forwarded to the Chief of the Materiel Division immediately with a full explanation of the occurrence recorded in the remarks.

(3) When a controllable propeller blade is returned to stock or transferred as an individual blade rather than as a part of a complete propeller, a propeller historical record card must be prepared for that blade, listing as much of the data called for on the record as may be available. When the blade is thus turned into stock the Historical Record Card for that blade must be filed as prescribed above. Whenever a blade is transferred, the historical record card must accompany it. It is essential that the operating time of a separate or spare blade be made a matter of record so that it can be carried forward when the blade is assembled in a hub. New blades received from a contractor as spares need not be recorded until installed in a propeller assembly.

36. Stores Charge, (A. C. Form No. 81)--a. General--(1) The Air Corps Form No. 81, illustrated in figure 29, is used by all Air Corps activities to cover issues of expendable Air Corps supplies for immediate consumption. Commanding Officers of depots, stations and organizations may authorize certain individuals to sign for property on this form and a list kept up-to-date, of the names of individuals so authorized must be posted at each stock room. A copy of all such lists, covering the time between audits, must also be furnished the property auditor at the time of audit. Depot, station and organization Supply Officers may issue the expendable supplies itemized, on a properly prepared and signed Stores Charge and expendable supplies required for immediate consumption by an organization located at a station must be obtained by persons authorized by the Organization Commander, direct from the Station Supply Officer, on this form.

b. The Form 81 must be accomplished in the following manner:

(1) Opposite the word "Station" enter the name of the station at which the supplies are issued.

(2) Opposite the word "Organization" enter the name of the organization or department to which the supplies are issued.

(3) Opposite the headings "Account Symbol" and "Work Order No." enter the proper account symbol and work order number. No Stores Charge may contain issues to more than one account symbol or work order number. A space has also been provided for entering the voucher number.

(4) Opposite the word "Date" enter the date of the transaction.

(5) Under the respective headings, enter the quantity, unit, part

WAR DEPARTMENT
AIR CORPS
Form No. 81
(Revised Sept. 28, 1939)

STORES CHARGE

VOUCHER NO. _____

PROPERTY CLASS _____

STATION _____ WORK ORDER NO. _____

ORGANIZATION _____ DATE _____ ACCOUNT SYMBOL _____

QUANTITY	UNIT	PART NO.	DESCRIPTION	UNIT COST	TOTAL COST	
				TOTAL		

ISSUED BY _____

COST DATA ABSTRACTED BY _____

ENTERED ON STOCK CARDS BY _____

I CERTIFY THAT I AM DULY AUTHORIZED TO SIGN FOR AND RECEIVE THE ABOVE EXPENDABLE ARTICLES, THAT THEY ARE FOR USE EXCLUSIVELY AS AUTHORIZED BY LAW AND REGULATIONS AND FOR THE PROJECT INDICATED BY THE ACCOUNT SYMBOL SHOWN HEREON.

GPO c16—11092 RECEIVED BY _____

Fig. 29. Stores Charge (Form 81).

number and description (name) of each article. Entries under the heading "Total Cost" are made only at depots or stations maintaining cost offices. No entry need be made under the heading "Unit Cost" when the total cost is extended by machine at the time of posting.

(6) In the spaces provided at the bottom of the form, enter the following: Opposite the heading "Issued By"; the signature of the issuing stockkeeper; opposite the heading "Cost Data Abstracted By"; the initials of the individual who abstracts the cost data; opposite the heading "Entered on Stock Cards By"; the initials of the stock record clerk who accomplishes the stock card posting; and opposite the heading "Received By"; the signature of the individual authorized to obtain supplies on Stores Charge.

c. Number of copies, distribution and posting--At depots or stations maintaining cost offices, Stores Charges must be prepared in triplicate, and elsewhere in duplicate. All copies must be turned in to the stockroom from which the supplies are to be obtained. After checking to see that the Stores Charge is correctly filled in, the issuing stockkeeper must sign his name in the place provided and stamp it with the symbol of the issuing stockroom.

(1) The original (and duplicate if prepared in triplicate) must be forwarded to the Supply Officer accountable for the supplies issued; the duplicate (or triplicate) being retained by the stockkeeper.

(2) The accountable Supply Officer must post the issue to his Stock Record account and at depots or stations maintaining cost offices, enter the total costs (if extended by machine) on the duplicate copy. If the total cost cannot be extended by machine, the unit cost must be entered by the posting clerk on the duplicate copy and the total cost computed by the Cost Officer. The Supply Officer must retain the original as a voucher to his Stock Record account and forward the duplicate, if any, to the Cost Officer who must file the Stores Charge in the proper envelope.

d. Not in stock Stores Charge--When a Stores Charge is presented to a stockroom for material that is not in stock, all copies must be stamped "Not in Stock". The original must then be forwarded to the Accountable Supply Officer, who will take steps to replenish his stock. The other copy or copies must be returned to the person originating the Stores Charge.

(1) When only a portion of the material called for can be furnished by the stockkeeper, all copies must be corrected to indicate the material furnished and the original marked "Balance Not in Stock". The Stores Charge, signed and stamped by the stockkeeper, may be disposed of, and the Supply Officer must then take steps to replenish his stock as required.

e. When a recoverable article is drawn and a like article is not returned for exchange, a signed statement must be included on the Stores Charge covering the issue, stating that a like article is not returned for exchange and showing the reason therefor, such as; initial installation, replacement of obsolete article, replacement of condemned article or replacement of lost article. In the case of squadrons or detachments, this statement must be signed by a commissioned officer or an authorized Air Corps inspector. In the case of stations or depots, the statement must be signed by especially qualified and selected enlisted or civilian personnel, an authorized Air Corps inspector or a commissioned officer.

37. Stores Credit, (A. C. Form No. 82)--a. General--(1) The Air Corps Form No. 82, illustrated in figure 30, is used by all Air Corps activities to cover local receipts of expendable Air Corps supplies that have been reclaimed from damaged equipment, manufactured locally, previously issued on Stores Charge, etc. Expendable property may be turned in to any Air Corps Station Supply Officer on Stores Credit by an individual.

b. Preparation and entries--The Form 82 must be accomplished in the following manner:

(1) Opposite the word "Station" enter the name of the station at which the supplies are received.

(2) Opposite the word "Organization" enter the name of the organization or department from which the supplies are received.

(3) Opposite the heading "Account No." enter the proper account and Work Order symbols. The account symbol must be entered on the line pro-

WAR DEPARTMENT
AIR CORPS
Form No. 82
(Revised Sept. 28, 1939)

STORES CREDIT

VOUCHER NO. _____
PROPERTY CLASS _____
WORK ORDER NO. _____
ACCOUNT SYMBOL _____

STATION _____
ORGANIZATION _____ DATE _____

QUANTITY	UNIT	PART NO.	DESCRIPTION	UNIT COST	TOTAL COST	

COST DATA ABSTRACTED BY _____ RECEIVED BY _____

ENTERED ON STOCK CARDS BY _____ TURNED IN BY _____

GPO 816—L1065

Fig. 30. Stores Credit (Form No. 82)

vided, and the Work Order symbol in the space immediately above. No Stores Credit may contain receipts to more than one Work Order or account. A space has also been provided for entering the voucher number.

(4) Opposite the word "Date", enter the date of the transaction.

(5) Under the respective headings enter the quantity, unit, part number, and description (name) of each article. Entries under the heading "Total Cost" must be made only at stations or in organizations maintaining cost offices. No entry need be made under the heading "Unit Cost".

(6) In the spaces provided at the bottom of the form, enter the following:

(a) Opposite the heading "Cost Data Abstracted By", the initials of the individual who abstracts the cost data.

(b) Opposite the heading "Entered on Stock Cards By", the initials of the stock record clerk who accomplishes the stock card posting.

(c) Opposite the heading "Received By", the signature of the receiving stock clerk.

(d) Opposite the heading "Turned in By", the signature of the individual turning in the property to the stockroom.

(7) Stores Credits covering the receipt into stock of manufactured articles must be stamped "Manufactured Stock". Stores Credits may not, however, be used to cover the receipt into stock of manufactured non-expendable articles.

c. Number of copies, distribution and postings--(1) At stations or in organizations maintaining cost offices, Stores Credits must be prepared in triplicate, elsewhere in duplicate. All copies must be turned in to the stockroom receiving the supplies. After checking to see that the Stores Credit is correctly filled in, the receiving stockkeeper must sign his name in the place provided and stamp the form with the symbol of the receiving stockroom.

(2) The original (and duplicate if prepared in triplicate) must be forwarded to the Air Corps Supply Officer into whose stockroom the supplies were received; the duplicate (or triplicate) being retained by the stockkeeper.

(3) The Air Corps Supply Officer receiving the supplies must post the receipt to his Stock Record account, retaining the original as a voucher, and at stations or in organizations maintaining cost offices, he must enter the total costs on the duplicate copy and forward it to the Cost Officer. In the case of a Stores Credit covering manufactured stock for which no unit costs are already available, the costs must be computed by the Cost Officer from the manufacturing Work Order and furnished to the Supply Officer for entry on his Stock Record. He must then file the Stores Credit in the proper envelope.

38. Memorandum Receipt, (A. C. Form 99)--a. General--The Memorandum Receipt, illustrated in figure 31, is used as a debit or credit receipt for issuing non-expendable property to individuals or organizations by accountable offices.

b. Preparation--The form must be prepared in duplicate by the accountable officer and the original and duplicate given to the individual receiving the property, who signs the original and returns it to the issuing officer. The duplicate is retained by the individual receiving the property, for file.

c. Responsibility--When property is issued on this form the signee becomes responsible for it, although the issuing officer retains accountability. Individuals receiving property on Memorandum Receipt need not maintain stock record accounts as this is maintained by the accountable officer.

39. Instruction Slip (A. C. Form 241)--a. General--This form which is illustrated in figure 32, is used by depots, bases and organizations for issuing inter-departmental instructions.

b. Preparation--Form 241 is prepared in duplicate by the personnel designated by the Engineering Officer. The originator signs the original and forwards both copies to the stockroom. The Stockkeeper indicates with the

WAR DEPARTMENT
AIR CORPS
Form No. 99
(Revised August 14, 1939)

WAR DEPARTMENT
AIR CORPS

*DEBIT *CREDIT

MEMORANDUM RECEIPT

No. _____

Station _____ Date _____

Issuing organization _____

*Issued to
*Turned in by } _____

QUANTITY	UNIT	PART NO.	ARTICLE

I acknowledge receipt of the above-listed Air Corps property:

_____
(Signature with rank and organization)

_____
(Official designation)

*Strike out words not applicable.

16—9965

Fig. 31. Memorandum Receipt (Form No. 99)

WAR DEPARTMENT
AIR CORPS
Form No. 241
(Revised February 11, 1935)

INSTRUCTION SLIP

To _____ Date _____

_____

_____

_____

_____

_____

_____

_____

_____

_____

_____

_____

_____

_____

_____

_____
(Signature)

Fig. 32. Instruction Slip (Form No. 241)

symbol " ✓ " on both copies, in the space provided, the items available for issue in the stockroom and signs and dates the form. If all items are on hand, he returns the original copy to the originator and may destroy the duplicate. If all items are not on hand, he forwards both copies to the Supply Office where action is taken to obtain the items which are not on hand. The estimated dates of delivery or other applicable remarks are entered by the Supply Office on both copies, in the space provided, after which the original is signed and both copies are returned to the Stockkeeper who forwards the original to the originator and retains the duplicate for future reference.

c. Items listed on the Bill of Material may be issued immediately on Stores Charge by the Stockkeeper, or obligated by tagging with an identification tag. In the latter case, the items are drawn as required on Stores Charge by the originator of the Bill of Material.

40. Stores Exchange, (A. C. Form 249)--a. General--The Air Corps Form 249, shown in figure 33, is used by stockkeepers whenever an article is turn-

Form No. 249
WAR DEPARTMENT
AIR CORPS
Revised Sept. 28, 1939

STORES EXCHANGE

Property Class _____

Station _____ Work Order No. _____

Organization _____ Date _____ Account Symbol _____

QUANTITY	UNIT	PART No.	DESCRIPTION	COND.	UNIT COST	REPAIR COST

Cost data abstracted by _____

Entered on stock record cards by _____ Exchanged by _____

Stockkeeper.

Fig. 33. Stores Exchange (Form No. 249).

ed in to stock in exchange for a like serviceable article. In this way it serves as a notice to the Supply Officer to post the resultant changes in quantities in the stock records. The form must be used only in the following cases and not for any transactions affecting the accountable balance:

(1) When a reparable article either expendable or non-expendable, is turned in for exchange. The term "reparable" in this case is not to be construed as "Unserviceable".

(2) When a condemned non-expendable article is turned in for exchange. Since condemned expendable articles are not placed in stock, such transactions are not considered exchanges as contemplated above. Replacements for condemned expendable articles are issued on Stores Charge.

b. Preparation and entries--The Stores Exchange form must be prepared and signed by the stockkeeper making the exchange and no other signatures are necessary. When required, the certificate prescribed in Army Regulations 35-6540, must be presented at the time of making the exchange. At depots and stations maintaining cost offices, separate forms must be prepared for each Work Order or account.

(1) At depots and stations maintaining cost offices, the form must be prepared in duplicate, elsewhere in original only, and the following entries made:

(a) In the heading: The name of the depot or station at which the exchange is made and the date. The account symbol and the Work Order number, if any, must also be entered.

(b) In the body of the form: The quantity, the unit of issue, the part number, if any, and the name of the articles exchanged must be entered under the respective column headings. The condition of the articles turned in as shown by the inspector's tag must be indicated in the column headed "Condition" by entering the letter "R" for reparable and "C" for condemned. Entries under the columns headed "Unit Cost" and "Repair Cost" may be made only at depots and stations maintaining cost offices. The unit cost must be entered by the person making the stock record posting, and the repair cost entered by the person abstracting the cost data.

(c) At the bottom of the form: The signature of the stockkeeper making the exchange, the initials of the person accomplishing the stock record posting and the initials of the person abstracting the cost data.

c. Postings to Stock Record--The original and duplicate (if prepared in duplicate) must be stamped with the symbol of the stockroom at which the exchange is made and forwarded to the supply office. When the articles exchanged are reparable, the postings prescribed in Air Corps Circular 15-105 must be made, whereas if the articles are non-expendable and condemned no Stores Exchange posting need be made. However, the articles must be immediately listed for disposal and dropped from the accountable record on the Inventory and Inspection Report or Report of Survey as the case requires.

d. Disposition by the Cost Officer--The Cost Officer must enter the repair cost and file the form with other data pertaining to the Work Order or account.

41. Inspection And Inventory Report (IGD Form No. 1)--a. Purpose--The inspection and inventory report is used for the condemnation of property which has become unserviceable in the service due to fair wear and tear, or which has been declared obsolete and is no longer required for service.

b. Preparation--In general, property is divided into two classes: Articles not listed as controlled and articles listed as controlled. Controlled articles are those so designated by the Chief of supply arms and services and comprise such articles as are difficult to procure, for any reason, or those over which special control is exercised.

(1) In the case of articles not listed by supply arms as controlled the Responsible Officer prepares and signs two copies of the I&I Report, listing the property to be inspected. The action of the Inspector is final unless he recommends that the property be turned in to a Depot or Arsenal, in which case the report is forwarded to the Corps Area Commander for final action.

(2) In the case of articles listed by Supply Arms as controlled, the

Responsible Officer submits a list through channels to the Corps Area, Depot, or Arsenal Commander, requesting permission to place the articles listed on an I& I Report for the action of an Inspector. The Corps Area, Depot, or Arsenal Commander then takes the proper action and, if necessary, specifies the disposition of such articles.

(3) In the preparation of the I&I Report there should be typed or printed directly under the title the additional words: "These articles are not listed as controlled" or "these articles are listed as controlled" as the case may be.

(4) Separate I&I Reports should be prepared for:

(a) Property pertaining to different supply arms and services.

(b) Property not listed as controlled.

(c) Property listed as controlled.

(5) Articles identified by a serial number should be listed singly, giving serial number, date of issue, and the length of time they have been in service, and any other pertinent data.

(6) Erasures of entries on I&I Reports are prohibited. Changes in entries will be authenticated by the initials of the Inspector.

(7) If not of record the cost price will be estimated and the word "Estimated" will be written above the price given.

(8) If the property to be inspected has been acted upon by a Survey Officer, a copy of the report of survey will accompany the I&I Report.

(9) Blank lines in column 1 of the I&I Report should be ruled out in red ink when no articles are entered thereon.

(10) See reverse side of Form (figure 34) for further details.

c. A complete I&I Report is a valid voucher on which to drop property from accountability.

d. Property should be arranged for inspection in the order of enumeration on the I&I Report and every article should be examined by the Inspector. The Responsible Officer accompanies the Inspector and should be prepared to give all necessary information in regard to the property.

e. Inspection and Inventory Reports, after action by the Inspector, are disposed of as follows:

(1) In the case of articles not listed as controlled the original is delivered by the Inspector to the Accountable Officer for use as a property voucher. The duplicate is forwarded by the Inspector to the Corps Area Commander for his information and file.

PAGE_____

INVENTORY AND INSPECTION REPORT

(These articles { are / are not } listed as ~~expendable~~ controlled)

Of _____ Property Pertaining to _____ (Station or organization)

Accountable Officer _____ Inspected at _____

On _____ By _____

INVENTORY BY RESPONSIBLE OFFICER				REPORT BY THE INSPECTOR						
1	2	3	4	5	TO BE DROPPED			9	10	11
					6	TO BE TURNED IN				
						7	8			
ARTICLES	Quantity	Total cost price. If not known, estimate it	Is condition due to fair wear and tear? If not, attach copy of survey report	To be continued in service	To be destroyed	For reclamation of component parts	To salvage	To be sold	To be turned in to depot or arsenal	REMARKS If special inspector, state authority and date here

3—9819

Fig. 34a. Inventory and Inspection Report (IGD Form 1) (Face)

INSTRUCTIONS

1. This form will be used for the inventory and inspection of property (except public animals) for condemnation in all the branches of the Army. Reports to be submitted in duplicate.

2. Separate inventories will be prepared for property pertaining to the different supply branches, for "Subsistence Stores" as distinct from other property of the Q. M. Corps, for property not listed as expensive, for property listed as expensive, for public buildings, and for vessels or boats of the Army.

3. For regulations relating to the inspection of property for condemnation, including the preparation, approval, and disposition of I. & I. Reports, see A. R. 20–35. Special attention is invited to the following paragraphs thereof:

Par. 2*a* (5): Articles identified by serial numbers will be listed singly, giving serial number, arsenal or other initial, date of issue, and length of time they have been in the service, together with such other special information peculiar to the article as may be required. These data may be given in column 1, using more than one line if necessary, or on a list attached to the I. & I. Report.

Par. 2*c*: Erasures of entries on I. & I. Reports are prohibited. Changes in entries must be authenticated by the initials of the inspector. Blank lines, column 1, will be ruled out in red ink when no articles are entered thereon.

Par. 2*d*: Cost price of the property if not of record will be estimated.

Par. 2*e*: If the property has been surveyed, a copy of the survey report will accompany the I. & I. Report. Unserviceable property required to be surveyed, pars. 5 and 6, A. R. 35–6640.

Par. 6*b* (6): Marking "I. C.," etc., at time of inspection of articles to be turned in to salvage. Salvage officers must receipt on the I. & I. Report for such property turned in.

Par. 6*b* (3): Marking or mutilation at time of inspection of articles "to be turned in for reclamation of component parts." Reclamation officer must receipt on the I. & I. Report for such articles turned in.

Par. 7: Witness to the destruction of property.

Par. 8: Disposition of I. & I. Reports.

4. When all the articles inventoried are not presented to the inspector, the number or quantity not presented should be carried in the column "To be continued in service" and a note made in the column for remarks, as "7 not presented."

.....

I CERTIFY that the articles "to be destroyed" on this I. & I. Report have been destroyed in my presence.

.....

.....

Par. 7, AR 20–35

.....

Received the articles "to be turned in for reclamation of component parts" on this I. & I. Report.

.....

.....

Reclamation Officer.

Par. 6*b* (3) AR 20–35

.....

Received the articles "to be turned in to salvage" on this I. & I. Report.

.....

.....

Salvage Officer.

Par. 6*b* (6) AR 20–35

WD, IGD, Form No. 1
Auth. Feb. 9, 1929
Revised Nov. 4, 1935

3—9819

.....

I CERTIFY that this inventory, consisting of ..... sheets, is correct in every particular; that each article enumerated has been examined by me personally, has never been previously condemned, and is, in my opinion, unserviceable or unsuitable for further public use here, and requires the action of an inspector.

.....

.....

Responsible Officer.

.....

I CERTIFY that I have carefully examined the articles enumerated within, and that the disposition recommended is, in my judgment, the best for the public interest.

.....

.....

Inspector.

For action of Department or Corps Area Commander.
(Par. 8, AR 20–35)

.....

.....

Approved:

.....

By command of .....

.....

For action of Chief of Supply Branch.

For action of the Secretary of War.

Fig. 34b. Inventory and Inspection Report (IGD Form 1) (Back)

(a) When the report covers any articles of machinery, mechanical equipment, and tools that may be required for donation under the Act of February 28, 1936 (49 Stat. 1147), both copies will be forwarded and acted upon in accordance with instructions governing reports on articles listed as controlled.

(2) In the case of articles listed as controlled both copies will be forwarded through channels to the Corps Area Commander who notes his action thereon and forwards both copies to the Chief of the Supply Arm or Service to which the property pertains. The latter indorses his approval or other action on both copies and transmits them to the Chief of Finance for final action.

f. Consult A. R. 20-35 for further details.

42. Report of Survey (AGO Form 15)--a. Relief from responsibility--Officers and others persons responsible for public property will be charged for any loss or destruction of, or damage to, property for which they are responsible, and the money value thereof will be deducted from their pay unless they are relieved from responsibility for the loss, destruction, or damage by an approved report of survey, or in other manner in accordance with regulations.

b. Loss or damage chargeable to officers, enlisted men and civilian employees--(1) If any article of public property is lost or damaged through the fault or neglect of any officer or enlisted man, he will be required to pay the value thereof as shown in current price lists if indicated therein, otherwise at invoice price, or the cost of repairs, provided that when in the judgement of the Commanding Officer credit should be allowed for depreciation in the value of the property at the time of loss or damage, the allowable credit will be determined by a Report of Survey.

(2) If articles of public property are embezzled, or lost or damaged through neglect, by a civilian employee, the value of the property or the amount of the damage thereto, determined by a survey if necessary, will be charged to him and deducted from any pay or money due him.

(a) The principle of allowable credit on account of depreciated value is also applicable in proper cases to loss or damage of public property through the fault or neglect of organization institutions, and other agencies or individuals.

(3) When an article in process of manufacture or repair in a manufacturing establishment is spoiled or damaged through the fault or incompetency of a workman, the money value thereof will be deducted from his wages on the pay roll, provided that the amount so deducted for work spoiled or damaged in any one day will not exceed the average pay of the employee for that day.

c. Classification of unserviceable and obsolete property with reference to disposition.

(1) Unserviceable and obsolete property is, with reference to its disposition, divided into classes as follows:

(a) Class I--Property worn out or otherwise rendered unserviceable byfair wear and tear in the service, and property declared obsolete by competent authority.

(b) Class II--Property rendered unserviceable from causes other than fair wear and tear in the service or obsolescence.

(2) Aeronautical equipment rendered unserviceable through wrecks resultings from flights ordered or authorized by proper authority will be considered as property of Class I, except when it is determined by an approved survey that the wreck was due to the fault or neglect of some person or persons.

(a) A survey is required whenever there is any question as to whether or not the wreck was the result of fault or neglect on the part of any person or persons or when the equipment is damaged beyond economical repair as result of the wreck.

(3) Class I property, except Air Corps property having reclaimable value to the Air Corps may be submitted directly for the action of an inspector without prior action by a surveying officer, or it may be entered on an AGO Form No. 15, Report of Survey. Air Corps property having any reclaimable value to the Air Corps will be placed on report of survey.

(4) Class II property, except in the case of public animals, will be entered on AGO Form No. 15, Report of Survey.

d. When a survey is required. When public property is lost, destroyed, or damaged, except by fair wear and tear in the service, a survey is required to determine the responsibility therefor and to recommend the disposition of the property damaged. The following classes of cases fall within the scope of these regulations:

(1) Property of a value greater than $20 lost, destroyed, or damaged in transit, when responsibility for the loss, destruction, or damage is not accepted by the shipping officer, through the medium of an over, short, and damaged report, or by the carrier.

(2) Property of a value greater than $50 ordered to be abandoned.

(3) Property lost, destroyed, or damaged through the fault or neglect of an officer, or enlisted man, or civilian and for which he declines to accept a charge against his pay.

(4) Property found to be short or damaged upon transfer of accountability from one individual to another, when controversy arises as to the liability for such shortage or damage.

(5) When property is damaged, destroyed, or unaccounted for while in the possession of a contractor or firm who declines to make payment therefor, except where the amount due may be determined and collection affected under terms of the contract.

(6) When survey is directed by the Commanding Officer or higher authority.

(7) Wrecked aeronautical equipment.

(8) When the value of property short, damaged, or otherwise unserviceable exceeds $50 or when in the judgment of the Commanding Officer all concerned should not be relieved from responsibility.

e. When action by a surveying officer is not required on a Report of Survey. Action by a surveying officer will not be required in the following cases:

(1) When the value of property ordered to be abandoned is not greater than $50.

(2) When the value of property short or damaged does not exceed $50 and the Commanding Officer approves report to relieve all concerned. At depots and arsenals this limitation is waived.

f. Preparation of Reports of Survey. (1) Whenever loss or destruction of, or damage to, public property occurs, requiring the action of a surveying officer, such action will be requested by the responsible officer as soon as practicable and in every case within 30 days after discovery of the loss, destruction, or damage, unless exceptional circumstances, which will be explained by the officer's certificate, prevent such action within the prescribed period.

(2) An officer instituting a survey will prepare and forward to the Commanding Officer A.G. O. Form No. 15 in triplicate. To the original copy of Survey Report there will be attached all pertinent papers upon which the interested officer relies to be relieved from responsibility, such as over, short, and damaged reports, bills of lading, certificates, and affidavits; and in cases of accidental damage to government property there will be attached a copy of the approved report of the investigating officer or proceedings of a board, if any, or other available report bearing on the accident which resulted in the damage. No copies of the supporting evidence are required to be attached to the duplicate and triplicate copies of the Survey Report form.

(3) Separate reports of survey will be prepared for property pertaining to different supply arms and services.

(4) The money total on each sheet, in the column headed "value" will be initialed by the responsible officer. No other money total will be initialed.

(5) Erasures, interlineations, and other alterations in the written matter of a report of survey must be initialed by the officer making them.

(6) When a report of survey covers damaged or unserviceable property not exceeding $50 in value and in the opinion of the responsible officer all concerned should be relieved from responsibility, he will include in the statement of date and circumstances on A.G.O. Form No. 15, a

recommendation for disposition of the property. At depots and arsenals the $50 limitation is waived.

(7) See reverse side of A.G.O. Form 15 (figure 35b) and A. R. 35-6640 for further details.

g. Examples of a typical certificate and affidavit suitable for exhibits to a survey follow.

CERTIFICATE

4-3-33

I hereby certify that on April 1, 1933, I was ferrying Harry Green, 1st Lieut., A.C., from Chanute Field, Illinois to Scott Field, Illinois in a BT-2B airplane, No. 32-26, on Chanute Field operations order No. 21, and while flying at an altitude of 5,000 feet over rough terrain in the vicinity of Effingham, Illinois, the engine suddenly stopped. I started to land in an apparently open field but upon nearing the field, I noted that it was littered with rocks and stumps. I therefore, changed my course in order to land in an adjoining field. In turning, the airplane stalled and spun into rough terrain, completely wrecking it.

John Doe,
1st Lieut., A. C.

Ex. "A" - R/S, 4/5/33, - $15,290.25.

STATE OF ILLINOIS)
)
COUNTY OF CHAMPAIGN) ss.
)
CHANUTE FIELD)

11-14-35

AFFIDAVIT

PERSONALLY APPEARED BEFORE ME THE UNDERSIGNED AUTHORITY FOR THE ADMINISTERING OF OATHS, ONE Thomas E. Turner, Sergeant, A. C., Serial No. 906704, 48th Pursuit Squadron, Chamute Field, Illinois, WHO FIRST BEING DULY SWORN, DEPOSES AND SAYS:

That he was on duty in the Engineering Dept. Chanute Field, Ill., as a mechanic in the airplane repair shop from July 1, 1934 to November 14, 1935; that the articles of government property listed below were issued to him by the Air Corps Supply Officer, Chanute Field, Ill., for his use in connection with shop work; that these articles, among numerous other articles, were used by mechanics in his charge; that upon inventory on November 4, 1935, he found these articles to be missing; that a diligent search and inquiry has failed to locate these articles; that every precaution was taken to safeguard the loss of property by lockers, etc., which are securely locked, except during working hours.

1 ea Caliper, micrometer, outside, ball point, tubing, ratchet stop, 0 to 1/2".
1 ea Gauge, thickness, 22 leaf, 0.004 to 0.025".
1 ea Gauge, screw pitch, "V" form, 6-60 thread.

FURTHER DEPONENT SAYETH NOT.

Thomas E. Turner, 906704
Sgt. 48th Pursuit Sqd.

SWORN TO BEFORE ME, AND SUBSCRIBED IN MY PRESENCE, THIS 15th DAY OF NOVEMBER 1935.

Robert W. Harper,
Captain, A. C.,
Adjutant.

EXHIBIT "A" - R,S, 11/13/35 - $8.00.

REPORT OF SURVEY

---------- Property ----------

(Class of property, ordnance, medical, etc.) (Stock record account and station)

Accountable officer ---------- Date ----------

STOCK NO.	ARTICLES [1]	QUANTITY	TOTAL COST [2]	DISPOSITION [3]		
				DESTROY	SALVAGE	OTHER
		Grand total [4]				

DATE AND CIRCUMSTANCES [5]

AFFIDAVIT

I do solemnly swear (or affirm) that the articles of public property shown above and/or on attached sheets were lost, destroyed, damaged, or worn out in the manner stated, while in the public service.

---------- (Signature)

---------- (Grade and organization)

Subscribed and sworn to (or affirmed) before me at ----------

this ---------- day of ----------, 19-----

---------- (Grade and organization or title; if notary public, affix seal)

CERTIFICATE [6]

I CERTIFY that the loss, destruction, damage, or unserviceability of the articles of public property shown above, and/or on attached sheets, was caused in the manner stated and without fault or neglect on my part, and that each article listed with a view to elimination by destruction has been examined by me personally, has never been previously condemned, and is, in my opinion, worthless for further public use.

---------- (Signature)

---------- (Grade and org., accountable or responsible officer)

Hq. ----------

Station ----------

Date ----------

To ----------

----

who is appointed surveying officer.

By order of ----------

---------- *Adjutant.*

(7)

Property Voucher No. ----------

W. D., A. G. O. Form No. 15
July 15, 1935

3—10463

Fig. 35a. Report of Survey (AGO Form No. 15) (Face)

FINDINGS.[8]—I have examined all available evidence as shown in exhibits ---------- to ---------- and as indicated below have personally investigated the same and it is my belief that the articles listed hereon and/or on attached sheets, total cost $----------

---

I have witnessed the destruction of the articles to be destroyed and/or received the articles to be turned in to salvage.

Date ----------

---------- (Officer witnessing destruction, or salvage officer)

(9)

Hq. ----------

Station ----------

Date ----------

APPROVED: Any damaged property shown above and/or on attached sheets has been inspected by me, or by a disinterested officer of suitable grade and arm or service, and the dispcsal indicated is in the best interests of the public service.

---------- ----------

---------- ----------
(Appointing authority)

(10)

Hq. ----------

Reviewed for corps area commander

Date ----------

Number ---------- ----------
Finance officer.

(11)

[1] If space is inadequate, list articles on suitably ruled and captioned attached sheets and recapitulate in this and Total Cost column as "Sheet 1, $147.60"; "Sheet 2, $254.30," etc.

[2] Estimate cost if not known.

[3] When disposition of articles is involved, the surveying officer will indicate same in proper column using abbreviated entries as follows: D—to be destroyed; S—to be turned in for salvage; V—to be sold; Rc—to be turned in for reclamation of component parts; C—to be continued in service; Rp—to be repaired; Ex—to be held for exchange.

[4] The grand total cost of all articles acted upon will always be shown.

[5] Enter a concise statement of date and circumstances together with a reference to certificates and affidavits submitted, as "Exhibits A to H herewith." Each exhibit will bear a reference to the report of survey to which it pertains as, "Ex. 'A'— R/S 3/4/34—$75.00."

[6] The certificate may be omitted if the oath is subscribed to by the accountable or responsible officer. In any event the oath must be subscribed to.

[7] For use of chief of arm or service or Secretary of War or both.

[8] Enter total cost as shown on the face of the report and continue with the findings in full. If any oral testimony is considered, the name of each witness and a clear, concise statement of the testimony given will appear in the findings. Opposite a caption "RECOMMENDATIONS", which should follow the findings without loss of space, enter appropriate recommendations. The recommendations should be complete in all details and cover all articles or subjects investigated. If space is insufficient, continue on additional sheets; the station, date, and signature to follow the recommendations in any case.

[9] Should the appointing authority disapprove the recommendations of the surveying officer, the disapproval with reasons or action recommended will be typed on the back of the report or on an attached sheet and reference made thereto in this space.

[10] For action or review of division, post, camp, or station commander if surveying officer is appointed by a subordinate administrative commander.

[11] For use of corps area commander.

U. S. GOVERNMENT PRINTING OFFICE 3—10463

Fig. 35b. Report of Survey (AGO Form No. 15) (Back)

Section IV

General Maintenance Policies

Paragraphs
Explanation of First, Second and Third Echelon Maintenance.....43
Procedure for Disposing of Damaged or Condemned Air Corps Property..44
Changes And Modifications of Aeronautical Equipment.....45
Depot Inspection And Repair of Aircraft And Overhaul of Engines.....46
Shipment of Wrecked Airplanes.....47
Fire Prevention.....48
Safety Policies.....49

43. Explanation of First, Second and Third Echelon Maintenance--a. Air Corps maintenance of the complete airplane comprises three echelons, namely:

(1) First Echelon. First echelon maintenance of the complete airplane is a function of all Air Corps units operating or maintaining aircraft, including Organized Reserve and National Guard Units, and Civil Flying Schools as applicable within the terms of their flying training contracts. It includes cleaning and servicing the airplane with fuel, oil, ammunition, bombs, pyrotechnics, oxygen and, where required, the inspection, calibration and loading into belts of machine gun ammunition; the performance of the periodic "preventive inspections" and the inspections resulting from pilots and crew reports as to the functioning of the airplane and its auxiliary equipment. First echelon maintenance also includes such adjustments, repairs, technical compliance changes and the removal and replacement of unit assemblies as can be performed with hand tools and spares carried with the organization as basic equipment or readily obtainable from base or station stocks. Normally, any unit assembly which can be transported by air, such as engines, propellers, control surfaces, landing gear units, etc., will be installed and replaced by the first echelon.

(2) Second Echelon. Second echelon maintenance, normally a function of the air base, embraces repairs and replacements requiring machinery, tools, spare parts or personnel not available in operating units, but which do not warrant or necessitate withdrawing aircraft from the base, or operating station if so equipped for return to the depot. This includes the removal and replacement of unit assemblies; fabrication of such parts as may be required in an emergency, or as directed in technical instructions and for which materials are provided; accomplishment of technical compliance changes; replacement, repair and service checking of auxiliary equipment; and the retrieving, reclamation or repair and return to service, except where depot inspection and repair is required, of aircraft incapable of flight and located within the base area.

(3) Third Echelon. Third echelon maintenance is a function of the air depot. This includes all operations necessary to completely restore worn or damaged aircraft of a condition of tactical serviceability, and the periodic major overhaul of engines, unit assemblies and auxiliary equipment; also, if necessary, the fabrication of parts not otherwise available, and the assembly of equipment from component parts. It also includes the retrieving, reclamation or repair, and return to service of aircraft incapable of flight when, due

to location or other causes, this action is more economical than its accomplishment by second echelon facilities.

44. Procedure for Disposing of Damaged or Condemned Air Corps Property--a. General--The instructions which follow, relating to the "reclamation" of Air Corps property, refer to reclamation by the Air Corps. In cases where the instructions refer to the "salvage" of property they relate to salvage by the Quartermaster Corps.

b. Relief From Responsibility--(1) Responsible officers, before disposing of unserviceable Air Corps property, should inform themselves of the instructions contained in A. R. 35-6640 and 20-35.

(a) A report of survey is used in the following instances:

1. When responsibility for damage to the property through fault or neglect of any person or persons is involved, or when any doubt as to such responsibility exists.

2. When damaged, unserviceable, or obsolete property has any reclaimable value to the Air Corps.

3. If, when an aircraft is wrecked, the extent of damage to aeronautical equipment caused by the wreck exceeds fifteen percent of the original cost of the equipment. Institution of a Report of Survey in this case does not necessarily imply that the aircraft so damaged must be disposed of.

(b) When the property to be disposed of contains no parts of reclaimable value, and is of no value whatsoever to the Air Corps, it may be listed on the Inventory and Inspection Report and held for action by an Inspector (provided no responsibility is involved) or it may be placed on Report of Survey with disposition to be recommended. In any case where responsibility is involved, the Report of Survey must be used.

c. The Reclamation Department--Reclamation Departments are established and maintained by all Air Corps Depots, stations and organizations. These departments are charged with the reclamation of unserviceable Air Corps property in accordance with the instructions contained herein.

d. Disposition of Unserviceable Air Corps Property--(1) (a) Unserviceable Air Corps property damaged beyond economical repair, which has been or is being surveyed, or for which no survey is required or ordered must be delivered to the Reclamation Department to be disposed of (excepting property awaiting the action of an Inspector, or that which is to be abandoned at the scene of an accident or is to be destroyed). When, within the continental limits of the United States, an aircraft has been wrecked due to structural failure, final disposition of the aircraft or its damaged parts must not be made until information is received from the Chief of the Materiel Division stating whether he desires an inspection by his representative of the wrecked aircraft or damaged parts. If notification is received that this inspection is desired, the aircraft with the damaged parts, must be preserved in as nearly its original wrecked condition as circumstances will permit until such

inspection has been completed, or instructions are received regarding its further disposition.

(b) When recommendations covering airplanes and engines have been approved by the Reviewing Authority, reclamation may proceed without waiting for final approval of the Secretary of War; except when fault or neglect appears in the survey, in which case the equipment must be held intact until final approval.

(c) Unserviceable articles that are damaged, but not beyond economical repair, at stations or by organizations not authorized or equipped to make the required repairs, and which are not worth the cost of transportation to a depot for repairs, may be treated as articles damaged beyond economical repair and disposed of as such.

(d) Commanding Officers of stations should, before approving the recommendation of a Surveying Officer for shipment of damaged property to a depot for repairs, notify the Control Depot that such property has been placed on survey, giving an accurate description of the property and its condition, and requesting the recommendation of the Control Depot as to disposition. Control Depots must check the requirements for such property and estimate its value to the service. Property must not be shipped to a depot for repairs without prior approval of the Control Depot. When shipped to the depot, a certified true copy of the Report of Survey is forwarded to the depot receiving the property. If, upon receipt at the depot, the property is found to be beyond economical repair, a statement of its condition and a request for disposition must be forwarded to the Chief of the Materiel Division, or, if outside the continental limits of the United States, to the Department Commander. Upon receipt of the authorization requested, the property may be turned over to the Reclamation Department without further action by an Inspector or Surveying Officer. The copy of the original Report of Survey furnished the depot, together with a copy of the authorization for disposal is filed for audit as authority for dropping the property from the accountable records of the depot.

(e) When damaged articles in the process of repair have integral parts or equipment installed thereon, that are damaged beyond economical repair, these parts should be removed and disposed of as prescribed above.

(2) No exceptions to the disposition outlined herein may be made when disposing of controlled items of Air Corps property.

(3) Air Corps articles damaged beyond economical repair that are received for reclaiming by a Reclamation Department must be disposed of as follows:

(a) If the quantity of serviceable and reparable parts and assemblies that can be reclaimed from the damaged property by dismantling it represents a value to the Air Corps sufficient to warrant this operation, the property must be dismantled and the parts and assemblies disposed of as follows:

1. Serviceable and reparable parts and assemblies are turned in to the Supply Officer on a Stores Credit (A. C. Form No. 82).

2. Parts and assemblies damaged beyond economical repair are turned over to the Quartermaster Salvage Officer for disposal.

(b) If the quantity of serviceable and reparable parts and assemblies which can be reclaimed from the damaged property by dismantling it, does not represent a value to the Air Corps sufficient to warrant this operation, the serviceable and reparable parts and assemblies which can be economically removed from the property are removed and disposed of as prescribed above. The remainder of the property should then be turned over to the Quartermaster Salvage Officer for disposal.

(4) (a) No aeronautical property which might be used later for aeronautical purposes should be turned over to the Quartermaster Salvage Officer for disposal until after the property has been rendered unfit for aircraft use.

(b) Unserviceable aeronautical property turned over to the Quartermaster Salvage Officer for disposal must be considered as "Waste" and a Report of Survey or Inventory and Inspection Report on this unreclaimable residue is not required. However, the Reclamation Officer must maintain a record that will permit the final disposition of all the property turned in to reclamation, including both the reclaimed components and the unreclaimable residue to be traced. When the condemned articles are removed from equipment undergoing repair or overhaul or consist of articles turned in to the reclamation officer, this record should consist of the Condemned Parts Tags, a copy of the Stores Credits covering reclaimed components returned to stock and a list signed by the Salvage Officer showing the weights of the various materials constituting the unreclaimable residue delivered to him. In the case of property covered by a Report of Survey, a copy of the Stores Credits covering the reclaimed components returned to stock and a list signed by the Salvage Officer showing the weights of the unreclaimable residue, cross-referenced to identify the particular Report of Survey, will constitute the required record. The Salvage Officer must be furnished a copy of the list showing the weights of materials turned over to him.

e. Condemned Air Corps property desired by the National Youth Administration--Whenever a quantity of Air Corps property having no further value to the Air Corps, but suitable for instruction purposes, accumulates at any Air Corps station within the continental limits of the United States, either as a result of action of an inspector for condemnation of property, or in the Air Corps Reclamation Department, the station commander should so notify the State Administrator of the National Youth Administration prior to damaging the property and request that a representative of the Administration inspect the property and select the articles desired. However, no articles of a secret or confidential nature should be thus reported. The articles selected by the National Youth Administration must be delivered, properly identified, to the Quartermaster Salvage Officer without further damage. The inspection and selection of property by the National Youth Adminstration must be completed within 30 days from date of notification. Air Corps property referred to herein which is not selected by the National Youth Administration within the period mentioned must be finally disposed of in accordance with the existing regulations pertaining thereto.

45. Changes And Modifications of Aeronautical Equipment—a. General. No changes, alterations, modifications, or remodeling of aircraft, engines or other aeronautical equipment should be made by any Air Corps activity without prior approval of the Chief of the Air Corps. Engineering Departments of Air Depots must, in their work on aircraft, conform strictly to standard drawings, specifications, and existing orders. Minor changes that conform to the standard practice of the Air Corps may be made when necessary, but any change that, in the slightest degree, affects the type of the equipment or the purpose for which it is designed must not be made without prior approval of the Chief of the Air Corps. All aircraft, when issued by depots, should with the exception of changes specially authorized by the Chief of the Air Corps, be so equiped that any essential items of tactical or special equipment authorized to be removed when airplanes are transferred for overhaul, can be readily installed by the receiving organization.

b. Changes in equipment--Changes on aircraft, engines, and other aeronautical equipment are authorized or directed by the Chief of the Air Corps only, and in the following manner:

(1) By written orders direct from the Office, Chief of Air Corps.

(2) By written orders from the Materiel Division, issued by order of the Chief of the Air Corps.

(3) By Technical Orders and Technical Radiograms or Telegrams.

c. The Headquarters of the Materiel Division, Air Corps, is exempted from the above in the conduct of experimental and service-test projects.

46. Depot Inspection And Repair of Aircraft And Overhaul of Engines--a. Air Corps aircraft must not be grounded for depot inspection and repair, due to wear and tear, merely on the basis of the expiration of predetermined periods of age or service, but only for good and sufficient reasons, indicated by the general condition of the equipment.

b. Maximum periods of service between depot repair operations depend on the efficiency of station and organization maintenance. The prescribed system of Air Corps maintenance inspection affords a constant check on the operating condition of each aircraft, and primary responsibility for determination of operating condition rests within the using organization. Successful operation of the policy depends upon strict adherence to prescribed inspection practices within the using organization, and efficient operation of the Engineering Sections of these organizations.

c. Experience has shown, that under normal operating conditions, either the amount of flying time, or elapsed time regardless of the amount of flying, can be attained with safety before Depot Inspection and Repair is necessary and in many individual cases, can be substantially exceeded. Tentative schedules for the inspection and repair of aircraft should be arranged by the depots with the stations in their respective control areas, but the actual physical condition of each aircraft as revealed by inspection is the control-

ling factor which determines whether it is to be given a depot inspection and repair before, at, or after the period indicated. Depots should submit to the Chief of the Materiel Division recommendations for changing the periods now designated whenever experience and observation indicates the need of change.

(1) Technical Orders issued in the past calling for compliance at Depot reconditioning or overhaul of aircraft, are normally accomplished at Depot inspection and repair of the aircraft.

d. When, in the opinion of the Unit Engineering Officer, required maintenance operations are beyond the scope of his organization (first echelon of maintenance), the Station or Base Engineering Officer must determine the nature and extent of the work required, and if, falling within the facilities at the Station or Air Base (second echelon of maintenance) the work may be performed locally. When the condition of an aircraft is considered such that Depot inspection and repair is necessary for continued safe operation, final determination as to its actual withdrawal from service and forwarding to the depot may be made only by arrangement with the depot concerned. The Depot Engineering Officer must determine in each case, the extent of work in addition to that prescribed by Technical Orders and other specific instructions that are required to place the aircraft in serviceable condition. This determination must be made by an inspection, regardless of the amount of flying time since the last depot inspection and repair and the inspection must be made by disassembling the equipment only to the extent necessary to determine its condition and the amount of repairs required, unless as the result of a wreck or other accident, the necessity for complete teardown is obvious. Responsibility for the serviceability for tactical use of aircraft when released by a depot rests with that depot. Depot commanders must also maintain close touch with activities in their areas to avoid peak loads of aircraft out of commission in the depot.

(1) When airplanes are ordered into depots for special modifications or repairs at other than the periods herein prescribed, only such additional work should normally be accomplished as is necessary to place the airplane in satisfactory condition for tactical operation, including compliance with Technical Orders requiring accomplishment "as soon as possible". In such cases, if additional work is required which would abnormally delay the return of the aircraft to its home station, the depot should arrange with the home station for its withdrawal from service and retention at the depot or its temporary return to the home station, as circumstances may warrant.

(2) Service activities should forward to the depot, with the airplane, all parts furnished them for compliance with Technical Orders which are to be accomplished while the airplane is at the depot.

e. Engines are normally removed for overhaul at the expiration of the periods listed in T. O. 00-25-4 (the desirable maximum number of flying hours between overhauls), except that additional flying time, not to exceed 20 per cent of the number of hours listed, may be authorized when the condition of the engine warrants. This authorization and final determination of the condition and serviceability of an engine is a responsibility of the Station or Air Base Engineering Officer. Consideration must be given, in

addition to actual inspection of engines, to any known characteristics peculiar to the equipment and to reports submitted by pilots on previous flights.

f. Normally, when airplanes are received at the depot for depot inspection and repair, and the engines installed therein have been flown more than 80 per cent of the specified overhaul period, the engines are removed and overhauled. If the engines in question have been flown less than 80 per cent of their overhaul period as specified in T. O. 00-25-4, they are ordinarily given such minor repairs as may be necessary and replaced in service. Variation from this procedure is a matter for the administration of Depot Engineering Officers after considering in each case, the general condition of the engine, its inherent characteristics, and the nature of the service to which it has been subjected. For instructions on engine change when airplanes are transferred other than to depots, reference should be made to T. O. 00-25-8.

47. Shipment of Wrecked Airplanes--a. When it is necessary to ship an airplane by rail following a forced landing or accident while on a cross country flight, the following instructions will apply:

(1) When arranging for cars it must be borne in mind that in making an L.C.L (less than carload lot) shipment, the articles being shipped must be properly packed. In most cases it will be found more economical to ship the airplane as a carload lot shipment, crating being unnecessary in this case, except where the additional protection is advisable. When possible an end-door car should be used when making carload shipments. If a wing or fuselage is too large to be placed within a box car, the required number of flat cars must be used.

(2) The size, shape, and number of parts will govern their location and position in the car and also their relative location and position to each other. Before securing them in the car, it will be necessary to carefully plan the placement of each part to be shipped.

(3) Each part must be adequately secured and protected to prevent movement and chafing. Parts shipped on open cars must be adequately protected from the weather.

(4) Wrapping, and padding where necessary, must be used at all points where an airfoil or fuselage comes in contact with securing members or other objects. Strips of burlap, canvas, or other suitable material should be used for wrapping, and, when best suited, for securing parts to the car, framework, or to other parts. When obtainable, packing felt should be used for padding. Rope, heavy cord, and wire may also be used for securing parts where such materials are more suitable than burlap or canvas.

(5) Wings and large horizontal stabilizers must be secured, leading edge down, in suitable supporting framework.

(6) Vertical stabilizers and small horizontal stabilizers can be blocked and wired in a vertical position, or cleated to the car floor, wall, or any adjacent framework, with strips of burlap or canvas.

(7) Elevators, rudders, and ailerons, that are not attached to other parts, may be secured in a vertical position by blocking and cleating the horns to the floor or wall of the car. When practicable, burlap or canvas may be used for cleating.

(8) The front end of the fuselage must be adequately supported and secured to the car floor. Where practicable, the supporting structure fastened to the floor should also be secured to uprights extending, on each side of the fuselage, from the floor to the car roof. These vertical members should also be braced to the sides of the car. When the uprights can not be secured to the roof of the car, or when an open car is used, the uprights must be securely braced against movements in all directions. The fuselage must then be securely lashed, or blocked, to the supporting structure. The tail end of the fuselage must likewise be secured with two uprights and one supporting crosspiece located near the tailskid or wheel, and an additional crosspiece located above the fuselage to hold the tail down.

(9) Struts must be separately wrapped, and boxed if boxing material is available. The box must be firmly secured to the car floor or stood on end and secured to the car wall. If boxing material is not available, the struts must be tightly secured together, after wrapping, and cleated to the car floor or wall.

(10) Streamline rods must be laid out their full length and securely bundled together. The bundle must then be cleated to the car floor or wall. If the threaded ends of such rods are exposed, they must be protected with burlap, canvas, or tape.

(11) Propellers must be removed and if facilities are available, disassembled. The blades and hubs must then be wrapped and cleated to the floor or packed in boxes. Propellers that can not be disassembled must be wrapped and cleated to the floor.

(12) Engines must be left installed in the fuselage or nacelle where it is possible to do so. When engines are removed they must be securely bolted to a suitable stand which in turn must be securely braced and anchored to the floor.

(13) The battery must either be removed and separately boxed, or all battery leads disconnected and taped prior to disassembly of the aircraft, to prevent possible short circuits during the loading operations and while in transit, or from any tampering with the electrical system.

(14) Before rail shipment is made of airplanes that have been submerged in salt water, the equipment must be thoroughly flushed with fresh water to arrest any corrosive action.

b. When preparing a wrecked airplane for shipment, instruments, radio equipment, combat equipment, cameras, etc., must not be removed unless the parts to which they are attached are not to be shipped, or unless separate packing is required to provide necessary protection during shipment. Care must be taken to prevent damage to this class of equipment.

c. If the airplane is to be shipped complete, the nomenclature on the Bill of Lading must be "Airplane completed, with engine (s)". If other than the complete airplane is to be shipped, the Quartermaster of the nearest Army Post must be consulted, if practicable, regarding the proper listing to be made on the Bill of Lading. If a commercial Bill of Lading is used, the statement "To be Converted to Government Bill of Lading at Destination" must be entered thereon.

48. Fire Prevention--a. In order to minimize the fire hazard in technical buildings at Air Corps activities, the following rules must be adhered to:

(1) While stored in hangars, airplanes must not be serviced with fuel.

(2) When weather conditions, temperatures, dust, etc., render it advisable to do so, airplanes, while stored in hangars, may be serviced with oil. When this is done, care should be exercised to see that oil is not spilled on the floors or allowed to accumulate in drip pans or other containers.

(3) Fuel trucks must not be stored over night in hangars, when other storage facilities are, or can be made available.

(4) Use of welding or blow torches, soldering irons, and other equipment in which open flames are used must be carefully restricted to isolated places where there is good circulation of air and where no fuel vapors can collect. Welding or cutting should not be undertaken in areas where fire is forbidden, nor should work of this nature be performed near inflammable materials unless proper precautions are taken to prevent ignition. In any form of welding or cutting, hot slag, sparks and globules of molten metal are formed and sometimes fly appreciable distances. When possible, inflammable materials attached to, or near equipment requiring welding, cutting or brazing, should be removed. If it is not considered practical to remove these parts, a suitable shield of asbestos or other effective heat-resisting material should be used to protect them. A fire guard should also be stationed nearby, with a fire extinguisher.

(a) Unless otherwise directed by the Engineer Officer or his authorized representative an airplane being repaired in a manner requiring the use of an open flame should be moved to the outside of hangar or near the door, so that it could be quickly moved to the outside in case of fire. It must also be a safe distance from other aircraft, or equipment considered inflammable. If welding is to be done in close proximity to the fuel tank, it should be drained and filled with water.

(b) The heating, welding or cutting of tanks that contain or have contained, inflammable or explosive substances--The following recommendation must be carefully followed to prevent danger of explosion:

1. Never attempt to weld, cut, braze, solder or otherwise heat a container filled with an explosive or inflammable substance.

2. Never attempt to weld, cut, braze, solder or otherwise heat an "empty" container that previously contained an inflammable or explosive substance, unless all such substance and its latent fumes have been

completely removed and the container is well vented.

3. Never attempt to weld, cut, braze, solder or otherwise heat closed cylinders or jackets unless such units are amply vented.

(5) Drums or other receptacles containing fuel, oil, dope paints, varnishes, etc., must not be kept in hangars of other buildings where aircraft or inflammable aircraft parts are stored except that small quantities of comparatively low volatility lubricating grease for immediate consumption may be retained in hangars, provided they are kept in steel lockers or similar containers.

(6) Cleaning of airplanes and other equipment with gasoline may only be done under the competent supervision of a commissioned officer, crew chief or qualified civilian foreman and as prescribed by existing technical orders.

(a) Adequate fire fighting equipment must be readily available while cleaning.

(b) Inflammable solvents must be kept in small, safety-type containers, and covered when not in use. All safety-type containers must be painted red and have the name of the cleaning material on each container. The spilling of acetone, denatured alcohol and paint remover on painted surface of cans must be avoided as these solvents will attack paint.

(c) All sources of fire hazards, such as smoking, open flames, or operation of any electrical equipment that may give off sparks, must be prohibited in the vicinity of cleaning and warning signs must be conspicuously posted during such cleaning operations.

(d) The wearing of shoes having exposed nail heads or iron cleats, which may cause sparking on hard surfaces must be avoided.

(e) All electrical parts must be thoroughly dried before being placed in use.

(f) Storage batteries, except those employing integral shielding must always be removed from an airplane before cleaning is started, unless otherwise specified in technical orders. Where integrally shielded batteries are employed it will not be necessary to remove the battery, but the battery cables must be disconnected. The cable terminals must be taped while disconnected, to prevent accidental contact with the battery terminals. In the event the shielded battery is located in an enclosed compartment within the airplane, the compartment and the conduit leading to the battery should be thoroughly ventilated by using compressed air before the battery is reconnected to the electrical unit.

(7) Smoking or striking matches must not be permitted within fifty feet of aircraft or hangars, shops or other buildings in which highly inflammable materials are stored or are being used. A sufficient number of signs covering instructions to this effect must be posted in conspicuous places in all buildings in which aircraft or highly inflammable materials are stored or likely to be used.

(8) Oily rags, waste, trash and other matter which might be the cause of spontaneous combustion must be kept in a covered metal receptacle and emptied at least once each day, and always prior to closing the hangar or building.

b. In addition to the instructions contained in the paragraphs above, commanding officers may issue such other instructions as are necessary to eliminate all fire hazards in technical buildings which are peculiar to local conditions, and make, or cause to be made, frequent inspections to see that the instructions covered herein are strictly complied with.

49. Safety Policies--a. Safety fundamentals--The following safety precautions and instructions are applicable generally to all personnel while engaged in laboratories, shops and hangars.

(1) Warning signs and signals--Do not disregard warning signs or signals; they were adopted for your safety.

(2) Attention to work--Pay strict attention to the work in which you are engaged. If, while operating a power-driven machine it becomes necessary to engage in conversation or to leave the machine and a hazard is created thereby, stop the machine.

(3) Practical jokes--Do not engage in practical jokes during working hours.

(4) Hazardous short cuts--Do not take hazardous short cuts when a safer way is available.

(5) Recklessness--Operate all vehicles and devices at a safe rate of speed, whether power or manually operated. Even warehouse hand trucks have caused serious accidents due to reckless handling.

(6) Caution for lifting--Do not make heavy lifts with the knees straight and rigid. Strains may be avoided by bending the knees. Be sure you are physically capable of making a lift before you attempt to do so, and in all cases be sure of your footing.

(7) Tampering--Do not tamper with machinery or equipment with which you are not familiar. Leave repairs and alterations to those authorized to perform them.

(8) Falling objects--Do not leave tools or material on overhead platforms, scaffolds, walkways, etc., unless they are secured from falling.

(9) Orderliness--Do not obstruct aisles, passageways, etc., with materials, tools, or other equipment.

(10) Dangerous projections--Do not leave objects with projecting screws, nails, etc., in places where they might cause injury.

(11) Open holes, ditches, etc.--Never leave openings, such as man-holes, ditches, etc., in locations that may be hazardous to others, without adequate warning signs or lights.

(12) Submitting of safety recommendations--Submit to the person in charge, any recommendation you may consider necessary to increase personal safety at the place you are employed.

(13) Cooperation for safe conditions--Cooperate with the person in charge to eliminate current unsafe practices by bringing them to his attention.

b. Personal protective equipment--The following equipment should be used whenever work of thenature cited after each item is being performed, and in all other cases where its use will prevent immediate or ultimate injurious effects to personnel.

(1) Laboratory aprons--For storage battery, painting and doping work. To reduce the fire hazard of aprons on which paints, dope, etc., has adhered, the aprons should always be removed before leaving the paint or dope shop during rest periods, lunch hours, etc.

(2) Pigskin gloves, sand blast type with steel armored palms--For sand blasting.

(3) Rubber gloves--For handling acids and caustics and when handling luminous compounds.

(4) Grinding goggles--For use when grinding, chipping, or performing similar work wherein the eyes are subjected to injury from foreign particl

(5) Welding goggles (gas welding)--To protect the eyes from sparks, intense visible light, or ultra-violet and infra-red rays when welding, cutting, etc., is being performed.

(6) Welding shields or helmets (electric welding)--To protect the face and eyes when performing arc-welding.

(7) Welding gloves--For use when welding, torch cutting, etc.,and handling hot articles.

(8) Respirators--For use when operating dope or paint spraying equipment, or when working in confined places where dope or paint spraying equipment is being operated. Equipment, such as goggles and respirators after having been issued to one person, should be sterilized before being issued to another. Respirators, and goggles should be disassembled for sterilizing. Respirator filtering substances should be replaced before reissue and no attempt made to sterilize such substances. The following sterilizing methods are recommended:

(a) Immersion for ten minutes in a solution of formalin made by dissolving one part of 40 per cent formaldehyde in nine parts of water.

(b) Subjection to a moist atmosphere of antiseptic gas, preferably formaldehyde, for a period of ten minutes.

(c) Cleansing of all parts with a cloth saturated with a 2 per cent solution of cresol or lysol.

c. Ventilation--Where sufficient fresh air cannot be naturally provided, and where dust, fumes, or spray of paint, etc., are usually present, suitable ventilating equipment should be provided.

(1) Where gas or oil heating is used, the heating appliances should be adequately vented to the outside.

d. Lighting--Adequate artificial lighting should always be provided whenever sufficient natural lighting cannot be obtained. Before installation, a study should be made to determine the best means for reducing glare and shadow as much as practicable.

e. Fire prevention--(1) Steam pipes. Inflammable materials should never be placed in contact with steam pipes.

(2) Bearings, drip pans and cups. Bearings should be kept well lubricated to prevent overheating and drip pans and cups emptied as frequently as is required to remove the excessive amounts of lubricants.

(3) Belts--Due to the fire hazards created by static electricity generated by belts, they should never be used in confined spaces where inflammable gases or mists are prevalent.

(4) Switches and motors. Switches that arc, or motors that spark at the commutator or elsewhere, must not be used in fuel storage buildings or other locations where inflammable gases or mists may exist.

(5) Inflammable material. Forges and furnaces should not be installed close to inflammable substances such as wooden walls, unless suitable shielding of heat-resisting material is installed.

(6) Piping. Pipes for liquid fuels should be adequately protected from possible breakage by vibration or by objects falling on or otherwise striking them.

(7) Rubber connections. Rubber connections in liquid fuel lines should be used only when necessary.

(8) Shut-off valves. A shut-off valve should always be installed at a safe distance from liquid fuel burners, to provide a means of shutting off the supply of fuel in case of failure of the regulating valves.

(9) Torches. Exercise precaution before lighting a blow torch, etc., to prevent the possible ignition of any gases or inflammable materials that may be in the vicinity.

(10) Gases and mists. Open flames or fires, or smoking by individuals must not be allowed in or around buildings where inflammable gases or mists may exist.

(11) Trash containers. Oily or paint-soaked rags, waste, etc.,if not otherwise disposed of immediately after use, and other similar inflammable refuse should be placed in tightly covered metal containers, which should be

emptied for disposal at least once every day and always immediately prior to quitting work.

(12) Open containers for paint, etc. Containers for paints, solvents, and other inflammables should be kept closed or covered at all times when not actually in use.

(13) Cleanliness. Rubbish should never be allowed to collect in or around any building.

(14) Local regulations. Local regulations covering fire prevention should be strictly enforced at all times.

f. Machine shop--(1) Machine arrangement. Machines should be so arranged that there is plenty of room for operators and stock, and so that the operator of any one machine is not required to work where endangered by the operation of adjacent ones.

(2) Qualified operators. Only those qualified as operators should be allowed to operate machinery.

(3) Clothing. While operating machines, loose or torn clothing, or long flowing ties, should never be worn by machine operators, nor should gloves be worn unless actually necessary to prevent injury to the hands.

(4) Adjustment. While a machine is in operation, do not attempt to adjust or reset the article being machined. While absorbed in such adjustments, the position of the cutter or other dangerous parts may be overlooked.

(5) Safetying of driving-power controls. While a machine is undergoing repairs, or is being cleaned or oiled, the driving-power control should be secured in the "off" position, to prevent the machine from being placed into operation and causing injury.

(6) Removal of chips and shavings--Chips, shavings, etc., should not be removed by hand while a machine is in operation. The machine should be stopped if practical, or a suitable brush or other article used for such purpose.

(7) Hoists for heavy objects. Whenever the lifting by hand of any heavy object is obviously precarious, a hoist should always be employed. The tendency to lift heavy chucks, face plates, pieces of stock or parts of machines without adequate preparation or assistance is a common fault that is the cause of many injuries.

(8) Screwing of face plates, chucks, etc., on and off. Never use operating power to screw face plates, chucks, etc., on or off machines. Perform these operations by hand.

(9) Chuck wrenches. When not in use, never leave a chuck wrench in the chuck on any power driven machine.

(10) Drill presses, boring machines, etc. To avoid the hazard of the tool grabbing and spinning the stock in a drill press, boring machine, etc., clamp the stock securely to the table of the machine. If the stock comes loose and spins, stop the machine. Never try to stop the spinning by hand.

(11) Power cut-off saws (metal). (a) Clamping of work. Never start the saw until the work has been securely clamped in the vise.

(b) Support for material. Provide a suitable support for the portion to be sawed off. It may drop and injure some one.

(12) Planers and shapers (metal). Be sure that stock is safely secured before starting the cut and, when practicable, check the cut by hand, before starting the power cutting.

(13) Circular saws (wood). (a) Condition. Saws should always be kept sharp, and frequently inspected for broken teeth or other defects. The manufacturer's instructions should be followed for saw sharpening, setting, gumming, etc.

(b) Work guide. The work guide must be adjusted parallel to the saw. A "Kickback" may be caused by misalignment between the saw and the guide. Use a low gage (thin) saw for thin material.

(c) Sawing of long stock. When sawing long stock, obtain assistance or make other provisions to support the stock as it comes off the saw table.

(d) Safety feeding device. Use a "push stick" with a notch cut in one end to push narrow strips through the saw. Never use the hands near the saw for this purpose.

(e) Misuse of saws. Do not use a rip saw for cross-cutting. While a cross-cut saw may be used for ripping, a rip saw is unsafe for cross-cutting.

(14) Band saws. (a) Blades suitable for work. Do not use a wide blade to cut a circle of small radius nor a light blade for heavy work.

(b) Splicing of saw blades. Saw blades should be spliced by experienced personnel only.

(15) Manually fed planers and jointers (wood). (a) Safety feeding device. Use a push block of hard wood provided with a handle on the top (similar to that of a wood plane) with a shoulder or cleat on the bottom rear end, to push short pieces of stock through the machine.

(b) Inspection of blades. Make frequent inspection for defects in cutter blades. Do not use blades that are defective.

(16) Swing saw. (a) Table arrangement. The material table for swing saws should be so arranged that the operator will not have to stand in

avoid injury.

g. Hoists. (1) The following safety precautions apply to hand operated hoists.

(a) Broken or otherwise defective blocks should never be used.

(b) Block hooks should always be adjusted so that they bear the load on their inside centers.

(c) Blocks should not be attached to rods, beams, etc., in a manner that will permit the blocks to slip when the load is applied. If danger of slipping exists, the blocks should be secured before applying the load.

(d) Periodic inspections should be made of suspension points of supporting trolleys, beams, etc., and of the mechanism of chain hoists, to insure safety in operation. Positive stops should always be provided at the end of tracks or rails on which traveling hoists are suspended.

(e) Severe side pulls should not be made on monorail systems, as such strains may spread or break the trolley frame, or twist or loosen the rail supports.

(2) Slings, hoisting lines, brakes and other mechanism.

(a) Slings. Slings must be of sufficient strength to safely support the load to be lifted.

(b) Hoisting cable and rope. Hoisting cable and rope should be of sufficient strength to safely support all loads to be handled and frequently inspected for defects and replaced if found to be unsafe. Care must be exercised to avoid kinking of wire cable and to avoid misaligning it on the drum. In no case should any attempt be made to guide a cable or rope onto a winding drum by hand.

(c) Broken wire strands. To avoid injury to the hands, care must always be exercised in handling stranded wire cable.

(d) Brakes and other mechanisms. Brakes and other mechanisms should be frequently inspected, tested, and, as required, properly adjusted by qualified personnel.

(3) General precautions. (a) Guide ropes. To avoid having the fingers or arms caught between hoisting lines and blocks, keep the hands off such articles while loads are being lifted or pulled. If necessary to guide objects, use guide ropes.

(b) Overhead lifts. Do not make a lift or carry a load over any person. See that everyone is in the clear before making the lift, and while carrying the load.

(c) Riding on loads. Personnel should never ride on loads being lifted or carried by hoists.

(d) Dangerous positions. When working with a load, including the guiding of it into place, be sure that no one is in a position that might result in personal injury when the load is raised, swung, carried, set down, or dropped.

h. Electrical equipment. The following safety-rules apply to electrical equipment, including wires, cables, and other conductors:

(1) Clothing. Personnel required to work on high voltage circuits and equipment, should not wear loose clothing or slippery or defective shoes. It is advisable to keep sleeves rolled down. The wearing of metal buttons or ornaments should be avoided, when not required to comply with existing regulations.

(2) Insulated tools. Tools with well insulated handles should be used whenever possible.

(3) Working in pairs. When the work is of a hazardous nature, employees should always work in pairs. This applies to working on overhead high voltage lines, working outside at night, working outside in wet weather, and under similar hazardous conditions.

(4) "Men at Work" signs. Whenever work is being done on a circuit, the switch should be secured in the "off" position and a warning sign placed on the switch to notify others that men are at work on the line.

(5) "Dead" lines. Never assume that a line is "dead"; be sure.

(6) Extension cords. Ordinary twisted lamp cord should not be used for portable extension cords. Use cord designed for such purposes.

(7) Substitutions for fuses. Do not make substitutions for fuses by placing wire or other material across fuse clips, and do not insert pennies, etc., behind fuse plugs to prevent them from "blowing out".

(8) Tampering. Do not tamper with electrical circuits or other electrical equipment.

(9) Repairs and installations. Electrical repairs and installations must be made by experienced personnel only.

(10) Inspections. To prevent personal injuries and fire hazards, frequent inspections of electrical wiring and other appliances should be made by competent persons.

i. Compressed air--(1) Equipment. Deteriorated or otherwise defective hose should not be used for compressed air. Compressed air nozzles, pipe, pipe fittings, tanks, etc., should be maintained in safe working condition.

(2) Precautions in using. (a) Never direct a blast of compressed air against the clothing or body, for the cooling effect, removal of dust, dirt, etc., or any other reason, because there is always the possibility of injury by hard particles being blown out with the air.

(b) Exercise care when using compressed air to blow dirt, chips, and other foreign substances from machines, benches, etc., as flying particles may cause injury to yourself and others.

(3) Precautions against playing pranks. Do not play pranks with compressed air. Many painful injuries and in some cases, fatalities, have been caused through thoughtless practical jokes with compressed air.

j. Welding equipment. (1) Oxygen and acetylene cylinders.

(a) Handling. Cylinders should be handled carefully, never being dropped or subjected to shocks or blows. They must not be lifted with slings or electromagnets. Valve caps should always be on when cylinders are handled, unless handling is incident to the use of the gas.

(b) Storage--Cylinders may be stored in open or closed storage but should be protected from dampness, and must be protected against excessive rise in temperature from direct sun rays or other source of heat. Segregate empty tanks from the full ones. Acetylene tanks should be stored in an upright position.

(2) Operators. No person should be allowed to operate a welding outfit of any kind, unless he is thoroughly familiar with its use and all of the hazards involved.

(3) Pressure regulating. Do not stand in front of the gauges, when regulating the pressure. Stand to one side to avoid injury in case the regulator glass breaks.

(4) Fumes and gases generated by welding, etc. (a) Metallic poisoning. Avoid breathing the fumes of burning paint, as such fumes are usually more or less ladened with particles of lead or zinc, which are poisonous to the human system. This also applies to fumes generated during brazing, and the welding, cutting, etc., of brass, zinc, and galvanized articles.

(b) Inadequate ventilation. When using a torch in an inadequately ventilated place, the fumes or gases generated, or the reduction of the oxygen in the air by the torch flame, may overcome the operator. Therefore, torch work should not be accomplished in such places, unless adequate forced ventilation is provided or the operator is supplied with a suitable signalling device and an assistant is safely stationed nearby to render aid when necessary. This also applies to electric welding.

(5) Handling the torch. (a) Torch flame and sparks. Keep the torch flame inside the field of vision and exercise care in directing the flame, to avoid accidental fire or personal injury by the flame or sparks.

(b) Backfiring. Shut off both valves on the torch immediately after backfiring occurs; first, the oxygen; then the acetylene. If the hose bursts, or escaping gas is ignited at the regulator or tank at any other time, immediately shut off the valve at the tank.

(c) Lighting the torch. If avoidable, the torch must not be lit with a match. A lighter, gas jet, or similar means must be employed, when

available. If necessary to use a match, light it, lay it on some non-inflammable substance, and then light the torch.

(6) Oiling of oxygen equipment. Under no circumstances should gages, regulators, or other oxygen equipment be lubricated or exposed to oil.

(7) Injuries from falling parts. Exercise care when torch cutting sheets, bars, etc., so that the part cut off does not fall on yourself or others.

(8) Injuries from hot metal. Do not leave hot metal where it may burn yourself or others. A chalked sign reading "Hot Metal" should be used to serve as a warning, when advisable.

k. Acids and caustics. (1) Common injuries. The most common injuries caused by acids and caustics are:

(a) Burns. By direct contact with the skin or through garments

(b) Poisoning. By taking internally, or inhaling fumes.

(c) Fires. By explosion through improper mixing, handling or storage.

(2) General precautions. (a) Withdrawing acid. A bulb operated siphon, a pump, or a tilting device should be used for withdrawing acid from large containers. The use of a siphon or pump is preferable and is less hazardous than the use of a tilting device.

(b) Mixing acid with water. Never pour water into acid. Pour the acid into the water and avoid excess heat.

(c) Removing stoppers. When removing stoppers from containers of liquid caustics and acids, do it carefully, to avoid spillage burns. The container may have internal pressure sufficient to force some of the liquid out when the stopper is removed, especially if the liquid is warm and the container is full.

l. Floors. (1) General. Floors should be maintained free from hazards such as holes, loose boards, splinters, loose or raised joints, and other hazardous defects.

(a) Projections. Nails, bolts, studs, pins, etc., projecting from a floor in a location where they create a hazard, should be removed or adequately guarded.

(b) Covers for openings. Whenever possible, covers for drainage openings, cuts, or pipings, etc., should be installed flush with the surrounding floor.

(c) Shielding of stumbling hazards. When it is necessary to

install pipes, conduits, etc., horizontally on top of floors in locations where they form stumbling hazards, they should be shielded by suitable guards placed over or on each side of the pipes, etc. and well tapered down to the floor.

(2) Cleanliness. (a) Dirt, refuse, etc. Floors should be kept as clean as possible. Dirt, refuse, etc., that accumulates from a job should be removed as often as is practicable during the work, and entirely removed on completion of the job or at the end of the day.

(b) Hazards from oil, grease, water, etc.--Serious injury may be caused by slipping on oil, grease, water, etc., on floors. Particular effort should be made to prevent such hazards by removing the oil, grease, or water, etc., as soon as possible.

(c) Laying of dust. To prevent the raising of dust when sweeping floors, damp sawdust or other suitable substances should be used.

(d) Cleaning with inflammable substances. Floors should never be cleaned with gasoline or other inflammable materials.

(3) Orderliness. (a) Obstructions. Aisles, passageways, etc., should be kept clear of obstructions, whenever possible.

(b) Unnecessary articles around machines. Stock, finished or unfinished work, tools, etc., should not be allowed to accumulate unnecessarily on floors around machines.

m. Scaffolding and ladders--(1) Scaffolding. The lumber used for scaffolding should be of good quality, free from knots and other defects. The person in charge of construction must be familiar with the stresses that are to be applied to the scaffolding, and be able to properly construct safe structures.

(a) Footing. Upright members must be adequately supported, to prevent sinking.

(b) Loads. Vigilance should always be exercised to avoid overloading scaffolds.

(c) Means of access. Safe access should be provided by means of fixed or portable ladders. A ladder consisting of a single upright with cross bars is unsafe.

(d) Substitutions for scaffold. Do not erect hazardous substitutions, when the work involved requires a properly constructed scaffold. Stacked boxes, barrels, etc., are unsafe for such purposes.

(2) Ladders. Be sure that all ladders are sufficiently strong and rigid for the purpose involved, and that suitable means are used to prevent the legs from sinking into soft ground, or from slipping.

(a) Position and bearing. Always place a straight ladder at and angle that will prevent it from slipping in any direction or overbalancing.

and so that it bears evenly on both sides at the upper as well as the lower end.

(b) When not used as a straight ladder, always adjust a step ladder to, and lock it in, its full "open" position, and see that it is upright and bears evenly on all four legs.

(c) Use at doors or windows. When using a ladder in front of a door that opens towards the ladder keep the door open or locked, or have some one guard the passage. This also applies to windows that may be opened and thereby cause accidents.

Do not place a ladder against a window sash. Use a cross board at least one foot wider than the window and properly secured to the upper end of the ladder.

(d) Ascending and descending. Always face the ladder, and use both hands for ascending and descending.

(e) Hazardous substitutions. Do not use hazardous substitutes such as boxes, crates, barrels, etc., in place of ladders, nor a ladder for work requiring a scaffold.